CONSTRUCTION QUALITY ASSURANCE PLAN

FOR TRENCH 12

US Ecology Nevada, Inc.

Hazardous Waste Management Facility

Beatty, Nevada

Nevada Hazardous Waste Treatment, Storage and Disposal Permit

NEV HW0019, USEPA ID #NVT330010000

October 8, 2007

TABLE OF CONTENTS

TABLE OF CONTENTS i

CERTIFICATION

1. INTRODUCTION 1-1

2. DISPOSAL TRENCH DESIGN CONCEPT 2-1
2.1 DESIGN CONCEPT 2-1
2.1.1 Below-Grade 2-2
2.1.2 Above-Grade 2-2
2.2 SUBGRADE DESIGN 2-2
2.2.1 Trench Excavation 2-2
2.2.2 Liner System Description 2-3
2.2.3 Leachate Collection and Recovery System 2-4
2.3 ABOVE-GRADE DESIGN 2-5
2.4 EXCAVATION SLOPE STABILITY EVALUATION 2-5
2.5 RUN-ON/RUN-OFF CONTROL 2-6
2.5.1 During Operations 2-6
2.5.2 Post-Closure 2-7
2.6 SURFACE FACILITIES MODIFICATIONS 2-7
2.6.1 Support Facilities Relocation 2-7
2.6.2 Temporary Fence Relocation 2-7

3. RESPONSIBILITY AND AUTHORITY 3-1
3.1 PERMITTING AGENCY 3-1
3.2 OPERATOR 3-1
3.3 PROJECT MANAGER 3-1
3.4 PROJECT ENGINEER 3-2
3.5 CONSTRUCTION QUALITY ASSURANCE CONTRACTOR 3-2
3.5.1 CQA Personnel 3-3
3.5.2 Quality Assurance Laboratory 3-4
3.6 CHIEF SURVEYOR 3-4
3.7 EARTHWORK CONTRACTOR 3-5
3.8 GEOSYNTHETIC MATERIAL MANUFACTURERS 3-5
3.8.1 Geomembrane Manufacturer 3-5
3.8.2 Geotextile Manufacturer 3-5
3.8.3 Geocomposite/Geonet Manufacturer 3-5
3.8.4 Geosynthetic Clay Liner (GCL) Manufacturer 3-5
3.9 GEOMEMBRANE FABRICATOR 3-6
3.10 GEOSYNTHETIC MATERIALS INSTALLER 3-6

4. CQA PERSONNEL QUALIFICATIONS 4-1
4.1 CQA OFFICER 4-1

4.2 CQA INSPECTION PERSONNEL 4-1
4.3 CHIEF SURVEYOR 4-1

5. MEETINGS 5-1
5.1 PRE-BID MEETING 5-1
5.2 PRE-CONSTRUCTION MEETING 5-1
5.3 WEEKLY PROGRESS MEETINGS 5-2
5.4 CONSTRUCTION PROBLEM OR WORK DEFICIENCY MEETING 5-3

6. DOCUMENTATION 6-1
6.1 PRE-CONSTRUCTION SUBMITTALS 6-1
6.1.1 Geomembrane Manufacturer 6-1
6.1.2 Geomembrane Fabricator 6-2
6.1.3 Geotextile Manufacturer 6-2
6.1.4 Geocomposite/Geonet Manufacturer 6-3
6.1.5 Geosynthetic Clay-Liner Manufacturer 6-4
6.1.6 Installer 6-4
6.2 DAILY RECORDKEEPING 6-5
6.3 INSPECTION DATA SHEETS 6-6
6.4 LINER INSTALLATION SUBMITTALS 6-6
6.5 CONSTRUCTION PROBLEM IDENTIFICATION AND CORRECTIVE MEASURES REPORTS 6-7
6.6 ACCEPTANCE OF COMPLETED COMPONENTS 6-7
6.7 PROJECT COMPLETION SUBMITTALS 6-8
6.8 FINAL DOCUMENTATION 6-8

7. CONSTRUCTION SEQUENCE AND CQA PROCEDURES 7-1
7.1 CONSTRUCTION SEQUENCE 7-1
7.2 CONSTRUCTION SPECIFICATIONS AND PROCEDURES 7-2
7.2.1 Excavation 7-2
7.2.2 Subgrade Preparation 7-2
7.2.3 Trench Sidewalls 7-2
7.2.4 Compacted Fill Placement 7-2
7.2.5 Liner Placement 7-3
7.2.6 Procedure for Confirming Line and Grade 7-4
7.2.7 Quality Control Procedures 7-4

8. REFERENCES 8-1

LIST OF FIGURES

Figure CQQ 1: Lift Control Requirements
Figure CQQ 2: Sample/Test Locations Report
Figure CQA 3: Construction Problem Identification and Corrective Measures Report

LIST OF APPENDICES

APPENDIX A **TRENCH 12 DESIGN DRAWINGS**

NV12-07-001 Title Sheet
NV12-07-002 Site Plan
NV12-07-003 Excavation Plan – Perimeter Soil Requiring Reompaction
NV12-07-004 Excavation Plan – Trench 12
NV12-07-005 Cross-Sections A and B
NV12-07-006 Cross-Sections C, D and Liner Details
NV12-07-007 Sump Details
NV12-07-008 Sump and Miscellaneous Details

APPENDIX B **CONSTRUCTION MATERIALS SPECIFICATIONS**

1. CONSTRUCTION MATERIALS SPECIFICATIONS B-2

2. SOIL MATERIALS B-3
2.1 SPECIFICATION FOR SURFACE SOIL LAYER IMPROVEMENT B-3
2.2 SPECIFICATION FOR LINER SUBGRADE ON TRENCH FLOOR AND IN SUMPS B-3
2.3 SPECIFICATION FOR PERIMETER STARTER BERM SOIL B-4
2.4 GRAVEL MATERIALS FOR LDS/LCRS SUMPS B-4
2.5 SELECT WASTE OPERATIONS LAYER B-4

3. LINER MATERIAL B-5
3.1 GEOTEXTILE B-5
3.2 GEONET B-6
3.3 GEOMEMBRANE B-6
3.4 GEOCOMPOSITE B-8
3.5 GEOSYNTHETIC CLAY LINER (GCL) B-10

4. PIPING B-11

APPENDIX C CONSTRUCTION METHODS SPECIFICATIONS

1. INTRODUCTION **C-2**

2. PHYSICAL LAYOUT **C-3**

3. EARTHWORK **C-4**
3.1 EXCAVATION LIMITS C-4
3.1.1 Surface Soil Improvement Excavation Limit C-4
3.1.2 Anchor Trench Excavation Limit C-4
3.1.3 Trench 12 Excavation Limit C-4
3.2 SURFACE SOIL IMPROVEMENT AREA – TRENCH PERIMETER C-5
3.2.1 Surface Soil Improvement Excavation Limit C-5
3.3 TRENCH SIDEWALLS C-7
3.3.1 Sidewall Preparation C-7
3.3.2 Slope Riser Trenched Recesses C-8
3.4 TRENCH BOTTOM SUBGRADE PREPARATION C-8
3.5 COMPACTED EARTH FILL PERIMETER BERM C-10

4. GEOSYNTHETIC MATERIALS (GENERAL) **C-11**

5. GEOSYNTHETIC CLAY LINER (GCL) **C-12**
5.1 LABELING, PACKAGING, TRANSPORTATION AND STORAGE C-12
5.2 SUBGRADE PREPARATION C-14
5.3 GCL INSTALLATION C-15
5.4 JOINING GCL PANELS C-16
5.5 DETAIL WORK AND PATCHING C-17

6. GEOCOMPOSITE/GEONET **C-18**
6.1 LABELING, PACKAGING, TRANSPORTATION AND STORAGE C-18
6.2 SUBGRADE PREPARATION C-20
6.3 GEOCOMPOSITE/GEONET INSTALLATION C-20
6.4 JOINING GEOCOMPOSITE/GEONET PANELS C-21
6.5 DETAIL WORK AND PATCHING C-21
6.6 LINER MATERIAL COVER C-22

7. GEOMEMBRANE **C-23**
7.1 GEOMEMBRANE LABELING, DELIVERY, STORAGE, AND HANDLING C-23
7.2 SURFACE PREPARATION C-24
7.3 GEOMEMBRANE INSTALLATION C-24
7.3.1 Panel Layout C-24
7.3.2 Weather Conditions C-25
7.3.3 General Placement C-25
7.3.4 Geomembrane Anchoring C-26
7.3.5 Panel Placement and Alignment C-27
7.3.6 Panel Identification C-28

7.3.7 Installation Schedule C-28
7.4 FIELD SEAMING C-28
7.4.1 Geomembrane Panel Alignment C-29
7.4.2 Personnel Requirements C-29
7.4.3 Weather Conditions C-29
7.4.4 Test Seams C-30
7.4.5 Test Seam Evaluation Criteria C-31
7.4.6 General Seaming Procedures C-32
7.4.7 Extrusion Seaming Requirements C-32
7.4.8 Fusion Process C-32
7.5 FACTORY SEAMS C-32
7.6 DEFECTS AND REPAIRS C-33
7.6.1 General C-33
7.6.2 Evaluation C-33
7.6.3 Procedures for Repair C-33
7.7 NON-DESTRUCTIVE SEAM CONTINUITY TESTING C-34
7.7.1 General C-34
7.7.2 Testing Procedures C-35
7.7.3 Installer Quality Control C-36
7.8 DESTRUCTIVE SEAM TESTING C-37
7.8.1 Testing Location and Frequency C-37
7.8.2 Sample Size C-37
7.8.3 Testing Procedure C-38

8. GEOTEXTILE C-41
8.1 LABELING, PACKAGING, TRANSPORTATION AND STORAGE C-41
8.2 HANDLING AND PLACEMENT C-42
8.3 CONFORMANCE TESTING C-42
8.4 SEAMS AND OVERLAPS C-42
8.5 REPAIR C-42

9. LINER SYSTEM COMPONENT DESCRIPTIONS C-44
9.1 BASE LINER SYSTEM COMPONENTS C-44
9.2 SLOPE LINER SYSTEM COMPONENTS C-45
9.3 TRENCH BOTTOM/SIDEWALL TRANSITION LINER SYSTEM COMPONENTS C-46

10. LEACHATE COLLECTION SYSTEM C-47
10.1 LEACHATE COLLECTION AND RECOVERY SYSTEM C-47
10.2 LEAK DETECTION SYSTEM C-48

11. LINER SYSTEM EXPOSURE PROTECTION C-50

LIST OF TABLES

Table C1: Soil Placement Inspection Schedule

CERTIFICATION

I certify under penalty of law that this document and all attachments were prepared under my direction or supervision in accordance with a system designed to assure that qualified personnel properly gather and evaluate the information submitted. Based on my inquiry of the person or persons who manage the system, or those persons directly responsible for gathering the information, the information submitted is, to be the best of my knowledge and belief, true, accurate, and complete. I am aware that there are significant penalties for submitting false information, including the possibility of fine and imprisonment for knowing violations.

US Ecology Nevada Representative: R L Marchand **Date:** 10/10/07

Printed name: Robert Marchand

Title: General Manager

Nevada Professional Engineer STEPHEN L. WAMPLER **Date:** 8 OCT 2007

PROFESSIONAL ENGINEER - STATE OF NEVADA
STEPHEN L. WAMPLER
CIVIL
No. 13641

10/8/07

EXPIRES: 6/30/08

073113

1. INTRODUCTION

This Construction Quality Assurance (CQA) Plan is for Disposal Trench 12 at the US Ecology Nevada, Inc. (USEN) Hazardous Waste Management Facility (HWMF) located about 11 miles south of Beatty, Nevada, in Nye County. The CQA Plan has been prepared to comply with the requirements of HW Permit Number NEV HW0019 dated April 29, 2005 (RCRA Permit). The CQA Plan has been developed under the direction of a professional engineer registered in the state of Nevada. The Plan describes the design features and procedures to be employed in the construction of Trench 12.

USEN is proposing to construct a new hazardous waste disposal unit (Trench 12) at the Beatty facility to increase waste disposal capacity. This CQA Plan presents the design concept used to develop the below-grade and above-grade portions of the trench and details of its construction. Details of the Trench 12 final cover will be provided in an appendix to be added to to this CQA Plan.

The final design for disposal Trench 12 completes the design process that began in 1995 and has received conditional approval from the Nevada Division of Environmental Protection (NDEP) in the 2005 RCRA Permit. The 1996 design concept is modified in this 2007 final design based on minor changes in USEN's plan for the relationship between disposal Trench 12 and adjoining disposal Trench 11. Also, the lease agreement between USEN and the State of Nevada for the property occupied by the Beatty facility, that includes the location of new Trench 12, allows USEN to consider technically appropriate ways to more effectively utilize the portion of its leased property between the southern limit of waste disposal in new Trench 12 and the northern limit of the adjoining closed low-level radioactive waste (LLRW) disposal area.

The final design for Trench 12 incorporates much of the 1996 design concept, including many aspects previously approved by NDEP, and some design concept updates that take into consideration USEN experience at Beatty since the mid-1990s, updated concepts for final closure of waste disposal units in arid regions, and the provisions of the renewed property lease agreement.

Appendices to this CQA Plan include:

- Appendix A: Trench 12 design drawings;
- Appendix B, Construction materials specifications; and
- Appendix C, Construction methods and quality control requirements.

This CQA Plan and appended design drawings and specifications specifically address the at-grade and below-grade aspects of Trench 12 construction. That is, the CQA Plan addresses aspects of at-grade construction (surface soil improvement, liner anchor trench, and starter berm for above-grade waste disposal) and aspects of below-grade construction (trench excavation, leachate management systems, and liner systems). Aspects of Trench 12 closure, including final cover elevations, slopes, and cover materials are not addressed in the CQA Plan and Appendices A, B, and C. These Trench 12 aspects, including design justification, design drawings, and construction specifications, will be addressed by USEN in a supplement to this CQA Plan.

This CQA Plan discusses the development of Trench 12 in three phases, Phases 12A, 12B, and 12C. In the following plan and appendices, reference to the trench or disposal unit usually applies to the total below-grade or above-grade portion of Trench 12, and reference to cells usually applies to the individual phases of Trench 12 development. The phased cells could be constructed and begin operations either separately or concurrently depending upon final development scheduling by USEN. This CQA Plan is intended to be equally applicable to separate or concurrent development of Phases 12A, 12B and/or 12C.

2. DISPOSAL TRENCH DESIGN CONCEPT

2.1 DESIGN CONCEPT

The disposal structure of Trench 12 was designed considering the following design parameters.

1. The disposal structure must provide a disposal volume that is consistent with the high cost of its construction. The configuration presented in this Plan provides a total disposal capacity of over 1.65 million cubic yards.

2. Trench excavation and disposed waste position must be consistent with applicable regulatory requirements, including the lease agreement between USEN and the State of Nevada for the property on which Trench 12 is located. The configuration presented is consistent with these requirements, based upon frequent discussions between USEN and NDEP during design. Aspects of this consistency with requirements include the following.

   - The disposal structure, including the final cover, is designed (and will be constructed) to be entirely located within the legal metes and bounds of the leased facility property.

   - The structure will be designed with access to other facility components, including entrance facilities, such as offices, truck scale and laboratory; and operational facilities including shops, waste stabilization facilities, wash points, etc.

   - The structure will be capable of being constructed using conventional earthwork equipment.

   - The final (covered) trench configuration will have stable, maintenance-free outer slopes, considering normal static loading and seismic-induced loading associated with the prescribed design conditions. On the basis of stability evaluation, it was determined that the permanent outer slopes of the compacted fill berms and final cover can be approximately three horizontal to one vertical (3:1) for the upper slope and approximately two horizontal to one vertical (2:1) on the lowermost portions of the perimeter where the cover is a compacted soil berm. This slope provides the desired stability within the property boundaries and allows for surface water runoff and vehicle travel between the above-grade portion of Trench 12 and the closed LLRW disposal facility to the south.

2.1.1 Below-Grade

The design for below-grade waste disposal in Trench 12 presented in this CQA Plan is consistent with these parameters and with USEN's earlier Trench 12 design submittals. Important aspects of the below-grade design concept include the following.

- Trench 12 will be excavated to a depth below original ground surface of approximately 75 feet,
- Trench 12 excavated sidewalls will be approximately 0.5:1.0 (Horizontal:Vertical, H:V) or approximately 63.5 degrees below horizontal,
- Trench 12 will have a composite liner satisfying Federal and State requirements.

2.1.2 Above-Grade

To facilitate above-grade disposal, a low compacted soil berm (starter berm) will be constructed around the full perimeter of Trench 12. Above-grade waste disposal will proceed above the starter berm with final above-grade waste (and final cover) slopes of 3:1 (H:V) and a final maximum height (top of final cover) above original ground of approximately 75 feet. The Trench 12 final cover will be a monolithic profile designed specifically for the low precipitation, arid setting of the Beatty facility incorporating a surficial material on steeper slopes intended to resist erosion during the initial years following closure when vegetation coverage (and surface stabilization provided by vegetation) is minimal. Details of final cover design and construction are not included in Appendices A, B, or C, but will be included in a supplement to this CQA Plan.

2.2 SUBGRADE DESIGN

2.2.1 Trench Excavation

Trench 12 site preparation activities include removal and replacement of a small portion of an upper, low cohesion, soil layer. Improvement of this surface layer will be followed by trench excavation, trench subgrade and slope preparation (including LCRS riser recesses cut into the side walls). Liner placement on the trench floor and side walls (including excavation of a perimeter liner anchor trench) will follow excavation and preparation. The Trench 12 design was developed to facilitate landfill construction in three phases, with the westernmost portion of

the trench as the initial phase, and the middle and easternmost portions as the second and third phases (respectively).

The eastern portion of the Trench 12 footprint includes a portion of the existing site entrance, office, water storage tank and other facilities (see Appendix A, Drawing 002). Site development to utilize Trench 12 ultimately will include construction of a new site entrance and relocation of some existing facilities to another area.

2.2.2 Liner System Description

The below-grade portions of Trench 12 employ a liner system consistent with the liner system specified by the RCRA Hazardous and Solid Waste Amendments (HSWA) of 1984 as minimum technological requirements (MTR) to prevent the migration of hazardous wastes from land disposal units to groundwater and the surrounding environment. The liner system is identical, with changes (as necessary) to utilize materials that are currently manufactured and available, to the liner system that originally was designed and approved in 1996 and the current RCRA Permit as satisfying applicable Federal and State requirements.

The basic liner system is comprised of the following elements (in order from the deepest to the shallowest):

- Compacted native soil subgrade (nine inches of material meeting a 1.0×10^{-5} cm/sec permeability specification),
- Geosynthetic-clay liner (GCL),
- 60 mil (0.060 inches thick) HDPE flexible membrane liner,
- double-sided geocomposite, consisting of a geonet heat-bonded between two geotextiles,
- 80 mil HDPE flexible membrane liner,
- double-sided geocomposite (on the bottom of the trench) or geonet with overlying non-woven geotextile (on the trench side walls), and
- 30-mil HDPE flexible membrane liner on trench side-walls. Note: this material provides UV protection to the underlying geotextile and prevents precipitation from entering the sidewall geonet, but serves no hydraulic purpose relative to compliance with RCRA requirements for liners.

The Trench 12 liner system base (subgrade) will be nine-inches (minimum) of compacted native soil subgrade beneath all trench floor areas except for leachate collection and recovery system (LCRS) sumps, and 36-inches of compacted soil subgrade beneath the sump areas.

The synthetic polyethylene liners used in the Trench 12 liner are manufactured specifically for liquid containment purposes. The quality of the geomembrane (also called flexible membrane liner or FML) material will be monitored by quality assurance/quality control (QA/QC) personnel so that the materials satisfy the required specifications (as presented in this CQA Plan). Manufacturer data on synthetic material resistance and strength, as well as USEN laboratory data for typical Beatty facility leachate, indicate that polyethylene liner materials are resistant to the wide range of chemicals likely to be disposed at the facility.

2.2.3 Leachate Collection and Recovery System

The Trench 12 double liner system incorporates a leachate collection and removal (LCRS) system and Leak Detection System (LDS). The LCRS is located above the primary liner, and is designed to collect and allow removal of liquids from within the disposal trench. The LDS system is located between the primary and secondary liner members, and its main function is to detect and remove any leakage through the primary liner.

The LCRS is associated with the primary liner system. The function of the LCRS is to intercept liquids infiltrating through the waste and to allow such liquid to flow toward and into the sumps for removal. The typical sump configuration is shown in the details on Drawing 007 in Appendix A. Liquid is removed from the sumps using pumps and riser piping as shown in Sections A, B, and C in Drawing 007. The components of the LCRS sump are sized to accommodate the maximum anticipated leachate flows while maintaining a fluid head above the primary liner that will not exceed one foot except during extreme (unusual) precipitation events when the one-foot head criterion might be exceeded briefly while being addressed by continuous, high-volume pumping. The basic design calculations for the LCRS sump and risers were presented in previous Trench 12 designs. Flow and pump sizing calculations are provided in the October 2007 Supplement to the Landfill Report (Landfill Report Supplement) and have been revised from the previous Trench 12 design (1996 Design) to acknowledge the slightly larger footprint and floor area.

2.3 ABOVE-GRADE DESIGN

A low compacted fill berm will serve as the perimeter and base of the above-grade waste disposal area. The final outer slopes of this starter or buttress berm will be 2:1. The starter berm will be constructed of native soil materials and placed with a minimum compaction requirement of 90 percent maximum dry density (MDD) and at a moisture content between the optimum moisture content (OMC) and OMC +2%, as determined by ASTM Method 1557. The starter berm will be constructed on the Trench 12 perimeter area after the native low cohesion surface soil has been recompacted to provide an acceptable foundation for the perimeter berm.

2.4 EXCAVATION SLOPE STABILITY EVALUATION

Excavation slope stability is of primary concern during waste disposal operations when the excavated slopes are not buttressed by disposed waste. After waste placement against the excavation sidewalls, the weight of disposed waste against the slopes will be sufficient to render the slopes stable under essentially any static or dynamic loading condition. USEN experience at this facility, including experience gained through extensive subsurface investigation, geotechnical engineering evaluations, and actual performance of excavated slopes, has clearly demonstrated that the excavation depths and slopes planned for Trench 12 will provide the required stability during construction and disposal operations. Extensive slope stability evaluations were included in the 1996 Design and supporting design documentation that are incorporated into the RCRA Permit. This design documentation included demonstration that excavation sidewalls were appropriately stable under static and pseudo-static (seismic) loading conditions. Since the present excavation slopes are the same as those considered in the 1996 design and design documentation, that demonstration of excavation slope stability also applies to the current design.

Important aspects of the 1996 slope stability evaluations are summarized below.

- The 75-feet deep, 0.5:1.0 (H:V) excavation slopes were determined to be acceptably stable under static loading and pseudo-static loading (simulating ground motion from seismic activity). That measure of stability is slopes with a safety factor (against failure) of at least 1.5 during static loading and at least 1.0 during pseudo-static loading.

- Of the possible deep-seated failure planes evaluated, the planes exhibiting the lowest safety factor (but still higher than minimum requirements) extended from near the base of the excavation slope to about 50 feet outside the excavation crest.

- Considering the modified excavation crest location (i.e., HCL location) on the south side of Trench 12 in the 2007 Design, this possible failure plane extends just a few feet (horizontally) into the area of the closed LLRW trenches.

- The period of time during which a deep-seated slope failure of this type is conceivable is very brief, likely only a few months in duration, since waste disposal in Trench 12 will begin to buttress the excavation slope, and increase safety factors, as soon as the first waste is placed against the base of the south trench side slope.

2.5 RUN-ON/RUN-OFF CONTROL

2.5.1 During Operations

The facility is located in a rise in the desert formed by an alluvial fan. This rise extends up-valley from the facility approximately 4.1 miles, forming an upstream drainage basin area of about 1.7 square miles. Drainage from the remainder of the desert and surrounding mountains is provided by the normally dry Amargosa River channel and natural drainage swales in the desert, and would not impact the facility during a 100-year storm event.

Run-on control is provided by a trapezoidal ditch north of the facility that diverts the major portion of the drainage area to natural swales west of the facility. Smaller triangular ditches along the northern and eastern boundaries of the facility divert the remainder of the drainage area around the facility. The 1996 Design references documentation that the run-on control ditches were designed to handle precipitation resulting from a 25-year, 24-hour storm. This referenced documentation also applies to the current design.

The 1996 and 2007 designs include measures to manage stormwater run-on and run-off during disposal operations and after final closure. During disposal operations, these measures will include temporary berms and drainage channels. These berms and channels prevent run-on from areas outside the Trench 12 foot print and direct runoff from the perimeter of an active Trench 12 to natural or enhanced drainage channels outside of the facility boundaries. The trench design (1996 and 2007) does not include features that are intended to cause stormwater retention (ponding) inside or outside the facility boundaries.

Stormwater falling inside the trench during disposal operations will be managed appropriately inside the trench as leachate or will be managed outside the trench as a waste. There are no situations where leachate would be allowed to enter surface water outside the trench.

2.5.2 Post-Closure

With regard to surface-water management, the 1996 and 2007 designs include final covers that essentially are identical. The final covers will prevent run-on from areas outside the final cover footprint from affecting the final cover or covered waste. Both final cover designs incorporate measures intended to manage stormwater run-off from the cover and control cover material erosion. Stormwater runoff conveyances constructed on both covers lead to stormwater channels along the base of the cover that lead to natural or enhanced drainage channels outside of the facility boundaries.

The 2007 Design includes a corridor about 15-feet wide between the toe of the final Trench 12 cover and the toe of the LLRW site cover that will provide for permanent routing of surface-water runoff originating on the adjoining portions of Trench 12 and the closed LLRW disposal site.

2.6 SURFACE FACILITIES MODIFICATIONS

Some of the surface facilities at the Beatty facility will be relocated as part of Trench 12 construction.

2.6.1 Support Facilities Relocation

Facility entrance and support facilities will be relocated. When the entrance and support facilities are relocated, and before excavation for Trench 12 Phase 12C, all surface and subsurface features (e.g., structures, concrete slabs, foundations, wiring, piping, etc.) inside the trench footprint, including the area between Trenches 12 and 11, will be removed.

2.6.2 Temporary Fence Relocation

Trench 12 construction, including surface soil improvement, anchor trench excavation, and liner construction, will require earthmoving equipment traffic to pass close to the north, west, and south boundaries of the Trench 12 area. In each of these areas, it probably will be necessary that

construction equipment temporarily cross the area boundaries that are marked by fencing. Beginning with Phase 12A excavation and continuing through Phase 12C excavation, USEN expects the necessity to temporarily relocate the boundary fences and fence signage in these areas. Temporary boundary fence relocation will be done in a manner that does not reduce facility security or permanently impact the adjoining buffer zone (north and west boundaries) or LLRW disposal area cover. The boundary fence, along with appropriate signage, will be relocated to the correct HWMF boundary following completion of Trench 12 excavation and liner construction.

Similar fence relocation might be necessary during final cover construction. If so, the boundary fence, along with appropriate signage, will be relocated to the correct HWMF boundary following completion of the final cover.

3. RESPONSIBILITY AND AUTHORITY

The following paragraphs generally outline the areas of responsibility and lines of authority for each organization involved in Trench 12 construction. This section is intended to establish the necessary lines of communication and the decision-making process for the execution of construction within the guidelines of this CQA Plan.

3.1 PERMITTING AGENCY

The Nevada Department of Conservation and Natural Resources, Division of Environmental Protection (NDEP) is authorized by law to issue a permit for the construction of a hazardous waste management facility. The Permitting Agency (or State) has the responsibility and authority to review and accept or reject any design revisions or requests for variance that are submitted by USEN after the permit is issued. The agency also has the responsibility and authority to review all CQA documentation during or after facility construction to confirm that the facility was constructed in accordance with the facility operating permit.

3.2 OPERATOR

USEN is responsible for the operation of the HWMF. The Operator has the authority to select and dismiss organizations charged with construction and quality assurance activities. The Operator also has the authority to accept or reject reports and recommendations of the CQA Officer and the materials and workmanship of the contractor. The Operator will also provide a Project Manager who will be responsible for coordinating and scheduling construction activities. The construction supervisor will keep the Project Manager and Project Engineer informed of the construction progress.

3.3 PROJECT MANAGER

The Project Manager is responsible for the design and construction of the Trench 12 disposal area at the Beatty facility. This responsibility includes assuring the Permitting Agency, by arranging for submission of CQA documentation, that the disposal area is constructed as specified in an approved design. The Operator and Project Manager have the authority to select

and dismiss organizations charged with CQA and construction activities. The Project Manager also has the authority to accept or reject design plans and specifications, CQA Plans, reports and recommendations of the CQA Officer, and the materials and workmanship of any contractors.

3.4 PROJECT ENGINEER

USEN may retain the services of one or more Project Engineer for the design and construction of Trench 12. Each Project Engineer will be a registered professional engineer in the State of Nevada. The Project Engineer is responsible for designing a hazardous waste land disposal facility that fulfills the operational requirements of the facility and the performance requirements of the Permitting Agency. Design activities might not end until the facility is completed. The Project Engineer might be requested to change some component designs if unexpected site conditions are encountered or changes in construction methodology occur that could adversely affect facility performance.

Additional responsibility and authority can be delegated to the Project Engineer by the expressed consent of the Project Manager. Additional responsibility and authority may include formulating and implementing a site-specific CQA Plan, periodic review of CQA documentation, modifying construction site activity, and specifying specific corrective measures in cases where deviation from the specified design or failure to meet design criteria, plans, and specifications is detected by CQA personnel.

3.5 CONSTRUCTION QUALITY ASSURANCE CONTRACTOR

The CQA Officer is the firm or individual responsible for observation, testing, and documentation of the activities related to construction quality assurance during the installation of the various materials, soil, and geosynthetics associated with the project. The CQA Officer is also responsible for issuing a final report to the Operator summarizing the observations and testing performed during the construction process, and certifying that the facility was constructed in accordance with the project specifications.

3.5.1 CQA Personnel

The overall responsibility of the CQA personnel is to perform those activities specified in the CQA Plan (e.g., inspection, sampling, and documentation). At a minimum, CQA personnel will include a CQA Officer and the necessary supporting CQA personnel. The CQA Officer will report to the Project Manager. The specific responsibilities and authority of each of these individuals are defined in the CQA Plan and in the associated contractual agreements with USEN. Specific responsibilities of the CQA Officer include:

- Reviewing design criteria, plans, and specifications for clarity and completeness so that the CQA Plan can be implemented, and documenting their review;
- Educating CQA personnel on CQA requirements and procedures;
- Scheduling and coordinating CQA inspection activities, including surveying and quality control checks;
- Reviewing survey data to assure that construction is proceeding in accordance with the design plans;
- Directing and supporting CQA personnel in performing observations and tests by:
    - Confirming that the equipment is uniquely identified and the calibration of measuring and testing equipment is conducted, recorded properly, and the calibration status is indicated;
    - Confirming that the testing equipment, personnel, and procedures do not change over time or making sure that any changes do not adversely impact the inspection process;
    - Confirming that the test data are accurately recorded and maintained (this may involve selecting reported results and backtracking them to the original observation and test data sheets);
    - Verifying that the raw data are properly recorded, validated, reduced, summarized, and interpreted.
- Providing to Project Manager and Project Engineer daily reports on the inspection results including:
    - Identification of work that the CQA Officer believes should be accepted, rejected, or uncovered for observation, or that may require special testing, inspection, or approval;

- Rejection of defective work and written verification that corrective measures are implemented;
- Verifying that a contractor's performance is in accordance with the project specifications;
- Reporting to the Project Managers immediately, any work that is not in compliance with the plans and specifications if corrective measures are not being taken; and
- Reporting to the contractor results of all observations and tests as the work progresses and verifying that they are in conformance with the specified acceptance criteria;

- For the supporting CQA personnel, specific responsibilities may include:
  - Performing independent on-site inspection of the work-in-progress to assess compliance with the facility design criteria, plans, and specifications;
  - Verifying that the equipment used in testing meets the test requirements and that the tests are conducted according to the standardized procedures defined by the CQA Plan; and
  - Reporting to the CQA Officer results of all inspections including work that is not of acceptable quality or that fails to meet the specified designs.

3.5.2 Quality Assurance Laboratory

The Quality Assurance Laboratory (or laboratories) is a party, independent from the Operator, Manufacturer, fabricator, transporter and Installer, responsible for conducting tests on samples of the various geosynthetic materials and/or soil obtained from the site. The Quality Assurance Laboratory may be from the same firm as the CQA Officer.

3.6 CHIEF SURVEYOR

The Chief Surveyor will be responsible for project layout, survey control, cross-sections and as-built drawings. The Chief Surveyor will provide certification that the facility was constructed to the lines and grades indicated on the as-built drawings. The CQA Officer in concurrence with the Project Manager will ensure that the required surveying is performed for verification of compliance with the plans and specifications.

3.7 EARTHWORK CONTRACTOR

The Earthwork Contractor is the firm responsible for disposal area construction, placement of excavated soil as directed, and placement and compaction of soil fill. The Earthwork Contractor will store equipment and materials in a manner that does not interfere with access to the facility or permanently impact areas not included in the USEN leased property.

3.8 GEOSYNTHETIC MATERIAL MANUFACTURERS

3.8.1 Geomembrane Manufacturer

The Manufacturer is responsible for the production of geomembrane. If required by contract, the Manufacturer also may be responsible for the fabrication and/or the transportation of the geomembrane rolls between the manufacturing facility and the fabricator and/or the site.

3.8.2 Geotextile Manufacturer

The Manufacturer is responsible for the production of geotextile rolls. If required by contract, the Manufacturer also may be responsible for the transportation of the geotextile rolls between the manufacturing facility and the site.

3.8.3 Geocomposite/Geonet Manufacturer

The Manufacturer is responsible for the production of geocomposite and geonet. If required by contract, the Manufacturer also may be responsible for the fabrication and/or the transportation of the geocomposite/geonet rolls between the manufacturing facility and the fabricator and/or the site.

3.8.4 Geosynthetic Clay Liner (GCL) Manufacturer

The Manufacturer is responsible for the production of the GCL from granulated bentonite and geotextile rolls. If required by contract, the Manufacturer also may be responsible for the transportation of the GCL between the manufacturing facility and the site.

Throughout the remainder of this document the word "Manufacturer" will be used generically in reference to the respective geomembrane, geotextile, or GCL Manufacturer.

3.9 GEOMEMBRANE FABRICATOR

The Fabricator is responsible for the fabrication of geomembrane panels from geomembrane rolls. If required by contract, the Fabricator also may be responsible for transportation of the geomembrane panels to the site. The Fabricator and Manufacturer could be the same entity.

3.10 GEOSYNTHETIC MATERIALS INSTALLER

The geosynthetic materials Installer is responsible for the handling, storing, placing, seaming, temporary loading and other aspects of the geosynthetic material installation as required herein. The geosynthetic materials Installer is also responsible for submitting all quality control certificates to the Operator including, but not limited to, those from the geomembrane, geotextile, geocomposite, and GCL Manufacturer. The Installer will store equipment and materials in a manner that does not interfere with access to the facility or permanently impact the buffer zone.

4. CQA PERSONNEL QUALIFICATIONS

4.1 CQA OFFICER

The CQA Officer is the individual assigned singular responsibility for all aspects of the CQA Plan implementation. On a day-to-day basis, the CQA Officer reports to the Project Manager. The CQA Officer will possess adequate formal academic training in engineering, engineering geology, or closely associated disciplines and will possess sufficient practical, technical, and managerial experience to oversee successfully and implement construction quality assurance activities for hazardous waste management facilities. The CQA Officer will be expected to ensure that communication of all CQA-related matters is conveyed to and acted upon by the affected organizations. The CQA Officer will be a professional engineer registered in the State of Nevada.

4.2 CQA INSPECTION PERSONNEL

The CQA personnel will report to the CQA Officer. The CQA personnel will possess adequate formal training and sufficient practical, technical, and administrative experience to execute and record inspection activities successfully. This will include demonstrated knowledge of specific field practices relating to construction techniques used for hazardous waste management facilities, observation and testing procedures, equipment, documentation procedures and site safety.

4.3 CHIEF SURVEYOR

The Chief Surveyor will be land surveyor registered in the State of Nevada.

5. MEETINGS

5.1 PRE-BID MEETING

A pre-bid meeting will be held at the project site to allow all geosynthetic materials, earthwork, and other services/materials bidders the opportunity to preview the facility and the working conditions. The meeting will consist of a tour of the facility and the work area, followed by an overview of the work to be performed, the project schedule, and the project drawings and specifications.

5.2 PRE-CONSTRUCTION MEETING

A pre-construction meeting will be held on site prior to the start of the geosynthetic installation work. At a minimum, the Operator, the Project Engineer, the Installer, the Earthwork Contractor, and the CQA Officer will be in attendance.

The following topics will be addressed during this meeting.

- Construction methods and projected scheduling.
- Provide each party with all relevant documents and supporting information.
- Review the project plans and specifications, including addenda to this document, with each party.
- Familiarize each organization with this plan and its role relative to the design criteria, plans, and specifications.
- Determine any changes to this plan that are needed to ensure that the facility will be constructed to meet or exceed the specified design.
- Review methods for documenting and reporting inspection data.
- Review the responsibilities of each party.
- Review the lines of authority and communication with each party.
- Review work area security and safety protocol.

- Review the procedures for observation, testing, and documentation required of each party. This review will include a discussion of sampling and testing strategies.
- Review the methods for handling construction deficiencies, repairs, and re-testing.
- Review the methods for establishing pay quantities.
- Review the methods for distributing and storing material samples, documents and reports.
- Review the methods for the prevention of damage to the construction materials from inclement weather or other adverse events.
- Conduct a tour of the facility and the work area to review construction conditions and material and equipment storage locations.

The pre-construction meeting will be documented by the CQA Officer or other party designated at the beginning of the meeting. The minutes of the pre-construction meeting will become part of the official record of construction and will be transmitted to all appropriate parties.

5.3 WEEKLY PROGRESS MEETINGS

Progress meetings will be held at the work area on a regular basis unless otherwise specified by the Project Manager, at a minimum of once per week, with representatives of the Operator, Earthwork Contractor (during earth work construction), and CQA Officer and the Installer (during geosynthetic materials installation work only) in attendance. The purpose of the meetings will be to address the following:

- Review the progress of the work and the overall project schedule.
- Review the work activities and locations since the last meeting and subsequent to the next meeting.
- Discuss unresolved construction deficiencies,
- Discuss potential problem areas.
- Review recent observations and test data.

The progress meetings will be documented by the CQA Officer or the Project Manager. The meeting minutes will become part of the official construction record and will be transmitted to the Project Manager, Project Engineer and to all appropriate parties.

5.4 CONSTRUCTION PROBLEM OR WORK DEFICIENCY MEETING

A special meeting will be held when and if a problem or deficiency is present or is likely to occur. As a minimum, the problem or work deficiency meeting will be attended by the impacted parties, as appropriate, and the CQA Officer. If the problem requires a design clarification or modification, the Project Engineer will be consulted.

The problem or work deficiency meeting will address the following:

- Define and discuss the problem or deficiency or the potential for one to occur;
- Review the potential solutions and the pros and cons associated with each;
- Determine a course of action and notify the appropriate parties of such; and
- Implement a corrective action plan to resolve the problem or deficiency or prevent one from occurring.

The problem or work deficiency meeting will be documented by the CQA Officer. The meeting minutes will become part of the official construction record and will be transmitted to all appropriate parties. Documentation of the problem or deficiency is described in detail in Section 6.5.

6. DOCUMENTATION

6.1 PRE-CONSTRUCTION SUBMITTALS

After award and at least one week prior to commencement of the work, the appropriate party will submit the following information to the Project Manager.

6.1.1 Geomembrane Manufacturer

A detailed description of quality control procedures for the manufacturing and testing of the geomembrane including, but not limited to, the following:

- Geomembrane sampling and testing frequencies and procedures;
- Explanation of the geomembrane roll numbers, lot numbers, and/or batch numbers;
- A copy of each of the quality control certificates issued for the specific material to be utilized on this project;
- A copy of each of the geomembrane Manufacturers' quality assurance testing methods and results of tests conducted on the material manufactured for this project;
- A copy of the geomembrane Manufacturer's roll quality control certificates. These will be supplied at a minimum frequency of one per every 50,000 square feet of geomembrane material produced and supplied to this project and will indicate conformance with each of the properties listed in Appendix B. These certificates will be issued only for the actual geomembrane rolls sampled and tested by the geomembrane Manufacturer or his representative; and
- A list of actual property values for comparison to specifications for the geomembrane material being procured for this project.

The Operator reserves the right to visit the geomembrane manufacturing facility at any time, particularly during production of materials specifically produced for this project. The Operator reserves the right to refuse use of any geomembrane supplied without the proper quality control documentation.

6.1.2 Geomembrane Fabricator

A detailed description of quality control procedures for the fabrication and testing of the geomembrane panels including, but not limited to, the following.

- Fabricated geomembrane roll seam sampling and testing frequencies and procedures;
- Explanation of the geomembrane roll numbers and panel numbers; and
- A copy of the geomembrane fabricator's roll quality control certificates. These will be supplied at a minimum frequency of one per every 50,000 square feet of geomembrane material fabricated and supplied to this project and will indicate conformance with each of the properties listed in Appendix B. These certificates will be issued only for the actual geomembrane rolls sampled and tested by the geomembrane fabricator or his representative.

The Operator reserves the right to visit the fabricating facility at any time, particularly during fabrication of materials produced for this project. The Operator reserves the right to refuse use of any fabricated product without the proper quality control documentation.

6.1.3 Geotextile Manufacturer

The following is a detailed description of quality control procedures for the manufacturing and testing of the geotextile including.

- Geotextile sampling and testing frequencies and procedures;
- Explanation of the geotextile roll numbers, lot numbers, and/or batch numbers;
- A copy of each of the quality control certificates issued by the resin supplier for the specific material to be utilized on this project;
- A copy of each of the geotextile Manufacturer's quality assurance testing methods and results for the resin utilized in manufacturing the material for this project;
- A copy of the geotextile Manufacturer's roll quality control certificates. These will be supplied at a minimum frequency of one per every 50,000 square feet of geotextile material produced and supplied to this project and will indicate conformance with each of the properties listed in Appendix B. These certificates will be issued only for the actual geotextile, rolls sampled and tested by the geotextile Manufacturer or his representative; and

- A detailed list of minimum property values for the geotextile material being produced for this project.

The Operator reserves the right to visit the fabricating facility at any time, particularly during fabrication of materials produced for this project. The Operator reserves the right to refuse use of any fabricated product without the proper quality control documentation.

6.1.4 Geocomposite/Geonet Manufacturer

The manufacturer shall provide a detailed description of quality control procedures for the manufacturing and testing of the geocomposite including, but not limited to, the following.

- Geocomposite/geonet sampling and testing frequencies and procedures;
- Explanation of the geocomposite/geonet roll numbers, lot numbers, and/or batch numbers;
- A copy of each of the quality control certificates issued for the specific material to be utilized on this project;
- A copy of each of the geocomposite/geonet Manufacturers' quality assurance testing methods and results of tests conducted on the material manufactured for this project;
- A copy of the geocomposite/geonet Manufacturer's roll quality control certificates. These will be supplied at a minimum frequency of one per every 50,000 square feet of geocomposite/geonet material produced and supplied to this project and will indicate conformance with each of the properties listed in Appendix B. These certificates will be issued only for the actual geocomposite/geonet rolls sampled and tested by the geocomposite/geonet Manufacturer or his representative; and
- A detailed list of minimum property values for the geocomposite/geonet material being produced for this project.

The Operator reserves the right to visit the geocomposite/geonet manufacturing facility at any time, particularly during production of materials specifically produced for this project. The Operator reserves the right to refuse use of any geocomposite/geonet supplied without the proper quality control documentation.

6.1.5 Geosynthetic Clay-Liner Manufacturer

The manufacturer shall provide a detailed description of quality control procedures for the manufacturing and testing of the geosynthetic clay liner (GCL) including, but not limited to, the following.

- GCL sampling and testing frequencies and procedures;
- Explanation of the GCL roll numbers, lot numbers, and/or batch numbers;
- A copy of each of the quality control certificates issued by the supplier for the specific material (bentonite and geotextile) to be utilized on this project;
- A copy of each of the GCL Manufacturer's quality assurance testing methods and results for the materials utilized in manufacturing the liner for this project;
- A copy of the GCL Manufacturer's roll quality control certificate signed by a responsible party of the GCL Manufacturer and indicating conformance with the material properties specifications provided in Appendix B. These certificates will be issued only for the actual GCL rolls sampled and tested by the GCL Manufacturer or his representative. Each quality control certificate will include roll identification numbers and results of quality control tests; and
- A detailed list of minimum property values for the GCL material being produced for this project.

The Operator reserves the right to visit the fabricating facility at any time, particularly during fabrication of materials produced for this project. The Operator reserves the right to refuse use of any fabricated product without the proper quality control documentation.

6.1.6 Installer

The Installer will provide the following information.

- A quality control manual for the installation, seaming, repairing and testing of geomembrane;
- A detailed installation schedule for the project including, but not limited to, installation activities and dates and/or durations of the various activities;
- Chemical and ultra-violet resistance properties of the polymeric thread to be used in sewing geotextiles;

- Quality control certification for the extrudate material to be utilized on this project. The certification will include identification of the results of testing for, as a minimum, specific gravity and melt index; and

- A detailed geomembrane panel layout drawing or drawings. The drawing(s) submitted will be of sufficient size and detail to distinguish the geomembrane panels and various features of the cell. The Operator reserves the right to reject any drawings submitted and/or request additional information to be submitted to satisfy the intent of this specification.

The Installer will be responsible for obtaining and submitting the geosynthetic materials information outlined in Section 6.1.

6.2 DAILY RECORDKEEPING

A summary report with supporting inspection data sheets will be prepared daily by the CQA Officer. This report provides the chronological framework for identifying and recording all other reports. At a minimum, the summary reports will include the following information:

- Unique identifying sheet number for cross-referencing and document control;
- Date, project name, location, and other identification;
- Data on weather conditions;
- Reports on any meetings held and their results;
- Equipment and personnel being worked in each location, including subcontractors;
- Descriptions of areas being inspected and documented;
- Description of off-site materials received, including any quality verification (vendor certification) documentation;
- Descriptions of materials incorporated into cell construction;
- Calibrations, or re-calibrations, of test equipment, including actions taken as a result of re-calibration;
- Decisions made regarding approval of units of material and/or corrective actions to be taken in instances of substandard quality;
- Unique identifying sheet numbers of inspection data sheets and/or problem reporting and corrective measures reports used to substantiate the decisions described in the preceding item; and

- Signature of the CQA Officer.

6.3 INSPECTION DATA SHEETS

All observations, and field and/or laboratory tests, will be recorded on an inspection data sheet. Typical sheets are included as Figures CQA 1 and CQA 2.

At a minimum, the inspection data sheets will include the following information:

- Unique identifying sheet number for cross-referencing and document control;
- Description or title of the inspection activity;
- Location of the inspection activity or location from which the sample increment was obtained;
- Type of inspection activity; procedure used (reference to standard method when appropriate);
- Recorded observation or test data, with all necessary calculations;
- Results of the inspection activity; comparison with specification requirements;
- Personnel involved in the inspection activity; and
- Signature of the appropriate CQA personnel and concurrence by the CQA Officer.

6.4 LINER INSTALLATION SUBMITTALS

The Installer will submit the following information to the CQA Officer or Project Manager during the installation process.

- Daily reports detailing the names of personnel and their arrival and departure times, the progress of the work, the arrival of material on site, and any problems encountered.
- Signed subgrade acceptance certificates for each of the areas prior to that area being covered by the geomembrane.
- Quality control documentation for the various installation functions as required by this document.

6.5 CONSTRUCTION PROBLEM IDENTIFICATION AND CORRECTIVE MEASURES REPORTS

A problem is defined herein as an actual physical condition that is in some way significantly different or inconsistent with a project design feature, or an instance of material or workmanship that does not meet the specified design. As appropriate, Construction Problem Identification and Corrective Measures Reports will be cross-referenced to specific inspection data sheets where the problem was identified. A typical sheet is included as Figure CQA 3. At a minimum, they will include the following information:

- Unique identifying sheet number for cross-referencing and document control;
- Detailed description of the problem;
- Location of the problem;
- How and when the problem was located (reference to inspection data sheets);
- Estimation of how long problem has existed;
- Suggested corrective measure;
- Documentation of correction (reference to inspection data sheets);
- Final results;
- Suggested methods to prevent similar problems; and
- Signature of the appropriate CQA personnel and concurrence by the CQA Officer.

Upon receiving the CQA Officer's written concurrence, copies of the report will be sent to the Project Engineer for his comments and acceptance.

6.6 ACCEPTANCE OF COMPLETED COMPONENTS

All daily inspection summary reports, inspection data sheets, and problem identification and corrective measures reports, will be reviewed by the CQA Officer.

Upon completion of construction, the Project Manager or his designated representative and the CQA Officer will visit the facility for a final inspection of the completed disposal unit for compliance with the design. An inspection report will be prepared by the CQA Officer outlining

the results of the inspection and any corrective measures deemed necessary to correct deficiencies. Documentation of corrective measures will be attached to the inspection report once corrective measures are completed (see Figure CQA 3).

6.7 PROJECT COMPLETION SUBMITTALS

Within two weeks following completion of the project the Installer will supply the following:

- Geomembrane installation certification.
- A warranty obtained from the geomembrane Manufacturer and the geomembrane fabricator.
- A warranty for the installation of the geosynthetic materials.

The CQA Officer will submit a final certification report in accordance with Section 6.8 within 30 days of completion of cell construction.

6.8 FINAL DOCUMENTATION

Within 30 days following completion of each phase of construction, a final certification report must be submitted by the CQA Officer to the Project Manager. The final certification report will include descriptions of each phase of construction, construction materials, and quality assurance procedures. As a minimum, the following information will be included:

- Daily inspection summary reports;
- Laboratory and field test results summary sheets for all testing required by this plan;
- Problem identification and corrective measures reports;
- Acceptance reports;
- Design clarification forms;
- QA/QC submittals for geosynthetic materials;
- Minutes of pre-construction meetings and weekly meetings;
- Geomembrane repair summaries; and

- As-built drawings.

Inspection data sheets will be retained as backup. This document must include certification of each construction component by the CQA Officer responsible for that phase of construction. This certification must be signed by a professional engineer registered in the State of Nevada. This report will be reviewed by the Operator and submitted to the Permitting Agency.

7. CONSTRUCTION SEQUENCE AND CQA PROCEDURES

7.1 CONSTRUCTION SEQUENCE

Trench 12 below-grade construction will be performed in three phases. Construction and disposal operations will be closely coordinated to maintain continuous disposal operations and construction schedules. The basic construction sequence for each of the three phases of Trench 12 below-grade construction are expected to be as follows.

1. Relocate fences in the construction area.
2. Excavate surface soil around the perimeter of the construction area. Replace with compacted soil.
3. Excavate to final depth, incorporating LCRS riser trenches (also herein called 'recesses')into the sidewall above the sumps as excavation progresses. Construction access ramps will enter the trench from the east.
4. Construct subgrade with 9 inches (minimum) of compacted soil on bottom and 36 inches (minimum) of compacted soil beneath sump areas.
5. Construct sumps.
6. Excavate liner anchor trench around the trench perimeter
7. Install sidewall liner components
8. Install trench floor and sump liner and LDS/LCRS components.
9. Submit required construction completion documentation and obtain NDEP approval for disposal of waste.

Above-grade waste placement will commence when waste disposal in specific portions (e.g., Phase 12A area) reaches original ground level. The basic sequence for the Trench 12 above-grade waste placement and final cover placement are expected to be as follows.

1. Construct compacted soil starter berms around the Trench 12 perimeter. Final slopes of the starter berms will be approximately 2:1 on outside walls and inside walls.
2. Dispose waste in Trench 12 above-grade area with careful elevation control, placing one to two feet of interim cover soil on the exterior edges of the waste surface.
3. Continue waste and interim cover placement until the elevation of waste crest is within about four feet of final closed disposal trench elevation.

4. Confirm that waste elevations are appropriate for final cover placement, regrade waste as necessary.

5. Place soil cover component layers to complete the final cover.

7.2 CONSTRUCTION SPECIFICATIONS AND PROCEDURES

Material and construction specifications and installation procedures for all components of Trench 12 below-grade and above-grade construction are provided in Appendices B and C. A summary of the specifications and procedures is provided below. Drawings and specifications for final cover construction will be provided in a supplement to this document.

7.2.1 Excavation

The below-grade portion of Trench 12 will be constructed in three phases. No benches are planned in the excavation. The excavation requirement is that the total depth of the trench will be about 75 feet below grade. The slopes will be constructed at 0.5:1 (H:V). The walls will be smoothed to remove protruding rocks and reduce depressions. Specifications for excavation are provided in Appendix C, Section 3.1

7.2.2 Subgrade Preparation

The subgrade preparation for Trench 12 will include compaction of 9 inches of compacted soil across the trench bottom and 36 inches of compacted soil below the sump areas. Specifications for subgrade preparation are included in Appendix C, Section 3.2.

7.2.3 Trench Sidewalls

Trench sidewall preparation for Trench 12 will include smoothing and/or filling of irregularities in the sidewall surface. Specifications for sidewall preparation are included in Appendix C, Section 3.3.

7.2.4 Compacted Fill Placement

Procedures to be followed to construct the compacted fill perimeter berm is provided in Appendix C, Sections 3.4 and 3.5.

7.2.5 Liner Placement

7.2.5.1 GCL Installation Procedure

The procedures that are to be followed to install the GCL are provided in Appendix C, Section 5, as cited below.

- Section 5.2: Inspection of subgrade for material that could damage the GCL, and removal of such material.
- Section 5.3: GCL placement, and procedures for protection of the GCL material before and during placement of material on the GCL.
- Section 5.4: Techniques to bond GCL seams.

7.2.5.2 Geocomposite and Geonet Installation Procedure

Procedures to be followed to install geocomposite and geonet layers are provided in the various specifications in Appendix C, as identified below.

- Sections 6.1, 6.2 and 6.3: Geocomposite and geonet layers placement, and procedures for protection of the geocomposite and geonet layers material before and during placement of other material on top of these materials.
- Section 6.4: Techniques to bond geocomposite and geonet layers seams and to ensure continuity of flow.
- Sections 6.5 and 6.6: Techniques to repair damaged geocomposite and geonet layers, and to cover installed materials.

7.2.5.3 Geomembrane Installation Procedure

Procedures to be followed to install geomembranes are provided in the various specifications in Appendix C, as cited below.

- Section 7.2: Inspection of geomembrane bed for material that could puncture the geomembrane, and removal of such material.
- Section 7.3: Geomembrane placement, and procedures for protection of the geomembrane material before and during placement of material on the geomembrane.
- Section 7.4: Techniques to bond geomembrane seams.

- Section 7.5: Methods to be employed for repair of the liner system components.

7.2.5.4 Geotextile Installation Procedure

Procedures to be followed to install geotextile layers are provided in the various specifications in Appendix C, as identified below.

- Section 8: Procedures to be followed to install geotextiles.

7.2.6 Procedure for Confirming Line and Grade

The procedure to be followed to confirm, by surveying methods, the line and grade of soil construction and waste placement is provided in Appendix C, Section 1.

7.2.7 Quality Control Procedures

The QC procedures to be followed by USEN for all aspects of Trench 12 construction are incorporated into the specifications included in this section and Appendix C.

8. REFERENCES

Bosscher, P.J., date unknown, WINSTABL, A Pre and Post Processor for STABL, University of Wisconsin.

CETCO, 1997, Bentomat/Claymax Technical Manual.

CETCO, 2007, product information available at www.cetco.com.

Fang, H.-Y., 1991, Foundation Engineering Handbook, Second Edition, H.-Y. Fang, editor, Van Nostrand Reinhold.

Grant Environmental, 1994, Geotechnical Investigation for Trench 12 at the USEN Hazardous Waste Management Facility, Beatty, Nevada.

Gundle SLT Environmental, 1997, Solutions Manual.

Gundle SLT Environmental, 2007, product information available at www.gseworld.com.

Huang, Y.H., 1983, Stability Analysis of Earth Slopes, Van Nostrand Reinhold Company, Inc.

HMA Environmental, 1996, Response to Notice of Deficiency for the Trench 12 Design Report, US Ecology, Beatty, Nevada, Facility.

HMA Environmental, 1997, Response to Verbal Comments, US Ecology, Inc. Beatty, Nevada, Facility.

Koerner, R.M., Carson, D.A., Daniel, D.E., and Bonaparte, R., Current Status of the Cincinnati GCL Test Plots.

Koerner, R.M., 1997, Designing With Geosynthetics, 4th Edition, Prentice Hall

Law Engineering, 1980, Nuclear Engineering Company Trench Stability Analyses, Beatty, Nevada, Facility.

Law Engineering, 1981, Geohydrological Studies, Beatty, Nevada, Disposal Facility.

Law Engineering, 1981, Geotechnical Studies, Deep Trench Stability Analysis, Beatty, Nevada, Disposal Facility.

O'Leary, P., and Walsh, P., 1992, Landfill closure and long-term care, Part 10 of Correspondence Course on Landfills and Waste, University of Wisconsin - Madison.

Seed, H.B., and Idriss, I.M., 1982, Ground Motions and Soil Liquifaction during Earthquakes, Earthquake Engineering Research Institute.

Siegel, R.A., 1975, STABL User Manual, A Description of the Use of STABL's Programmed Solution for the General Slope Stability Problem, Purdue University.

Tokimatsu, K., and Seed, H.B., 1987, Evaluation of settlements in sands due to earthquake shaking, Journal of Geotechnical Engineering, v. 113, no. 8.

TRC Environmental Solutions, 1996, Trench 12 Design Report, Volume I, Prepared for USEN.

TRC Environmental Solutions, 1996, Trench 12 Design Report, Volume II, Prepared for USEN.

USEN, 1987, Design Report, Trench 10 Above-Grade Disposal Facility, USEN Hazardous Waste Management Facility, Beatty, Nevada.

USEN, 1993, Landfill Report, Appendix D, Drainage Diversion Ditches Design Calculations.

USEN, 1993, Landfill Report, Appendix E, Closure Cost Estimate.

USEN, 1993, Landfill Report, Appendix Q, Slope Stability Analysis for Cell Above-Grade Embankment.

USEN, 1994, Scheduled Closure Plan, Beatty, Nevada.

USEPA, 1985, Settlement and Cover Subsidence of Hazardous Waste Landfills, EPA/600/2-85/035.

Figure CQA 1: Lift Control Requirements

Inspection Sheet Number: _____ **Location:** _____

Date: _____

Item	Specifics	Inspector
EQUIPMENT USED		
Type		
Configuration		
Weight		
PASSES PER LIFT		
Lift Number		
MOISTURE CONTENT		
Adjustment Method Used		
Equilibration Time		
Quantity of Water Used		
LIFT THICKNESS		
Loose (inches)		
Compacted (inches)		
LIFT PLACEMENT		
Start Time		
Finish Time		
Observation Start/Complete		
GENERAL OBSERVATIONS		

Figure CQA 2: Sample / Test Locations Report

Inspection Sheet Number: _____ **Location:** _____

Date: _____

Sample Type	Location	Time Collected	Collectors Initials	Pass / Fail	CQAO Approval	Comments

Field Analyses	Test Method	Requirement
DN = Density (nuclear)	ASTM D2922	every 2,000 yd^3
DS = Density (sand cone)	ASTM D1556	every 10 DN samples
MN = Moisture (nuclear)	ASTM D3017	every 2,000 yd^3
Laboratory Analyses		
MO = Moisture (oven dry)	ASTM D2216	every 10 MN samples

Figure CQA 3: Construction Problem Identification and Corrective Measures Report

Corrective Measures Report Number: _____ **Date:** _____

Re: Inspection Sheet Number: _____ **Date:** _____

QA Inspection Location and Construction Activity			
Result of QA Inspection and Tests, Deficiencies Observed, Actions Taken, and Corrective Action of Contractor			
Verbal Instructions Given to Contractor			
Controversial Matters in Detail/Disagreements			
Resolution/Corrective Action (retest, rework)			
Remarks			
Inspector's Signature	Date	CQA Officer Signature	Date

APPENDIX A

TRENCH 12 DESIGN DRAWINGS

DRAWINGS LIST

NV12-07-001	Title Sheet
NV12-07-002	Site Plan
NV12-07-003	Excavation Plan – Perimeter Soil Requiring Improvement
NV12-07-004	Excavation Plan – Trench 12
NV12-07-005	Cross-Sections A-A' and B-B'
NV12-07-006	Cross-Sections C-C', D-D' and Liner Details
NV12-07-007	Sump Details
NV12-07-008	Sump and Miscellaneous Details

USEcology Nevada

an *American Ecology* company

LANDFILL TRENCH 12 DESIGN
HAZARDOUS WASTE MANAGEMENT FACILITY
BEATTY, NEVADA

RCRA FACILITY ID NO. NVT330010000
HAZARDOUS WASTE PERMIT NUMBER NV HW0019

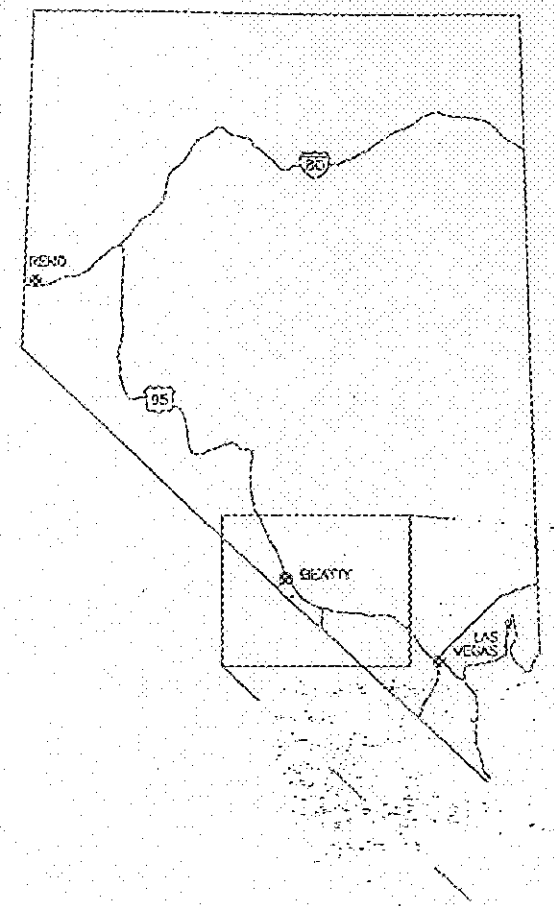

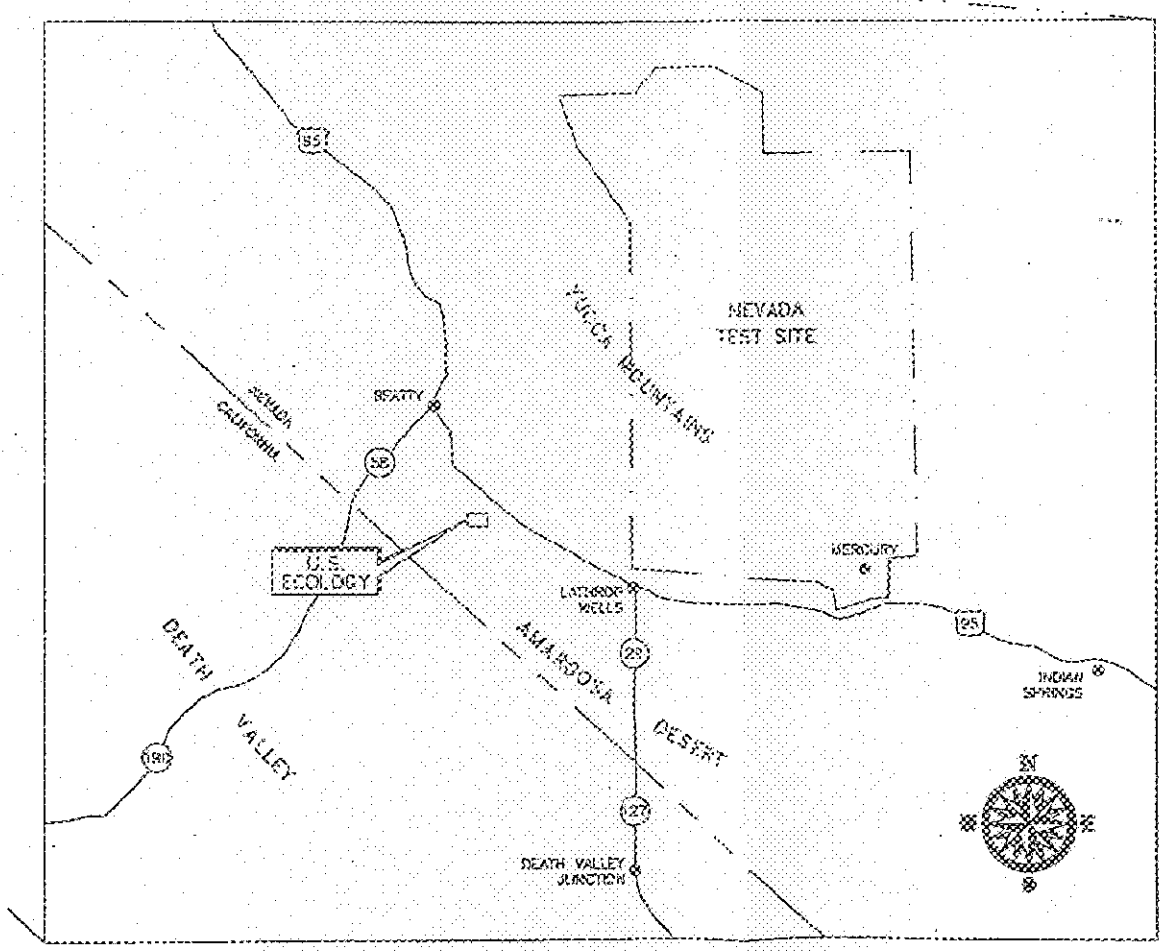

VICINITY MAP

20 10 0 20
SCALE MILES

INDEX OF DRAWINGS

SHEET NO.	DRAWING NO.	TITLE
1	NV12-07-001	TITLE SHEET
2	NV12-07-002	SITE PLAN
3	NV12-07-003	EXCAVATION PLAN - PERIMETER SOILS REQUIRING RECOMPACTION
4	NV12-07-004	EXCAVATION PLAN
5	NV12-07-005	CROSS SECTIONS A-A AND B-B
6	NV12-07-006	CROSS SECTIONS C-C, D-D AND LINER DETAILS
7	NV12-07-007	SUMP DETAILS
8	NV12-07-008	SUMP AND MISCELLANEOUS DETAILS

NOTE: THESE TRENCH 12 PLANS ARE REVISED FROM 1996 TRENCH DESIGN DRAWINGS NV-161-001 THROUGH NV-161-010 WHICH WERE CONDITIONALLY APPROVED BY THE NEVADA DEPARTMENT OF ENVIRONMENTAL PROTECTION IN RCRA PERMIT NEV HW0019 DATED APRIL 29, 2005.

BASE COORDINATE ASSUMED
N 10,000 E 10,000
FOUND 1" IRON PIPE AS TAG
NW COR. NE 1/4, NW 1/4
SEC. 35, T 13 S, R 47 E, M.D.M.

E 10,000 | E 10,500 | E 11,000 | E 11,500 | E 12,000 | E 12,500

N 10,000 | N 9,500 | N 9,000 | N 8,500

EXISTING ROAD

CULVERT

TRENCH 12
HORIZONTAL CONTROL LINE
(TOP OF EXCAVATION SLOPE)

ACTIVE TRENCH 11

CLOSED TRENCH 10

TRENCH 22

TRENCH 21

TRENCH 20

TRENCH 2
TRENCH 3
TRENCH 4
TRENCH 2
TRENCH 1

TRENCH 7
TRENCH 14
TRENCH 10
TRENCH 17
TRENCH 16
TRENCH 15
TRENCH 18

PRE-1989 DISPOSAL AREA

CLOSED TRENCH 9

CLOSED TRENCH 8

STEPHEN L. WAMPLER
CIVIL
No. 13641
PROFESSIONAL ENGINEER STATE OF NEVADA

10/1/07 6pm

LEGEND

- HORIZONTAL CONTROL LINE
- PERIMETER LINE
- DRAINAGE DITCH AND DIRECTION OF FLOW
- PROPERTY LINE
- FENCE LINE
- MONITOR WELL LOCATION AND NUMBER
- SOIL VAPOR EXTRACTION WELL
- 1' CONTOUR INTERVAL, FEET (MSL)
- 5' CONTOUR INTERVAL, FEET (MSL)
- TRENCH 1 — LOW LEVEL RADIOLOGICAL WASTE TRENCH

1. MAIN SITE ENTRANCE
2. ADMINISTRATION OFFICE
3. SERVICES LOUNGE
4. WAREHOUSE AND LAB STORAGE
5. FUEL STORAGE
6. MAINTENANCE SHOP
7. LOW TEMPERATURE THERMAL DESORPTION
8. TRUCK PARKING
9. DECONTAMINATION BOOTH
10. MSW PROCESSING AREA
11. BATCH STABILIZATION TANK AND SILOS
12. STABILIZATION TANKS
13. TRUCKING TRANSFORMER AREA
14. LOW TEMPERATURE THERMAL DESORPTION FUTURE EXPANSION
15. DOT HAZARDOUS WASTE STORAGE AREA
16. FIRE DEMAND HYDRANT
17. STORAGE MAINT./STAG. BUILDING

SCALE: 100 50 0 100 FEET

DATE OF TRENCH 11 TOPOGRAPHY: OCTOBER 2006
DATE OF TRENCH 12 TOPOGRAPHY: APRIL 2007
DATE OF AERIAL TOPOGRAPHY: JUNE 1994

REV.	DESCRIPTION	DRAWN BY	DESIGN BY	CHECK BY	APPR'D BY	DATE
0	ISSUED FOR REGULATORY REVIEW	LAM	CAB		SLW	10/1/07

US Ecology Nevada
an American Ecology company

PROJECT NUMBER: 073113 DATE: 10/1/07

BEATTY NEVADA
HAZARDOUS WASTE MANAGEMENT FACILITY

SITE PLAN
TRENCH 12

DRAWN BY	DATE	DESIGN BY	DATE	CHECK BY	DATE	APPR'D BY	DATE	SCALE	JOB NO.	DRAWING NO.	REV.
LAM	9/28/07	CAB	9/28/07	SLW	9/28/07	SLW		1"=100'	073113	NV12-07-002	0

CAD FILE NAME: F:\Data\073113\112 Design Package\autocrack design\NV12-07-002.dwg

PLOT DATE: 10/1/07

BASE COORDINATE ASSUMED
N 10,000 E 10,000
FOUND 1" IRON PIPE W/ TAG
NW COR. NE 1/4, NW 1/4
SEC. 35, T 13 S, R 47 E, M.D.M.

INTERIOR LIMIT OF EXCAVATION

35 FEET (SEE NOTE)

EXTERIOR LIMIT OF EXCAVATION

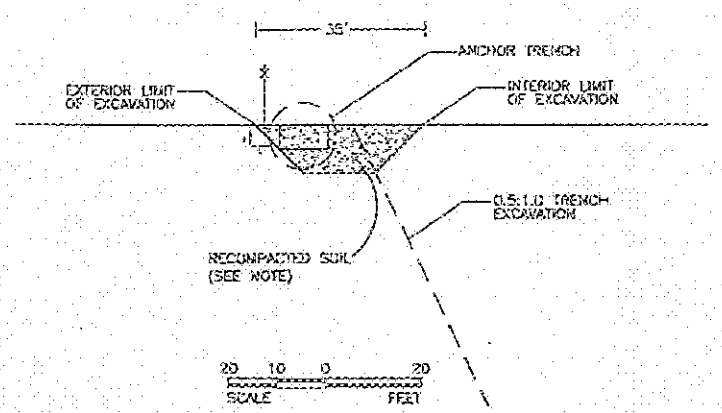

NOTE: LIMITS OF SURFACE SOIL REQUIRING RECOMPACTION ARE SHOWN NOMINALLY AS 10' BELOW THE TOP OF SLOPE, 35' WIDE TOWARD THE PERIMETER LINE. ACTUAL DIMENSIONS WILL BE DETERMINED IN THE FIELD BASED ON ACTUAL DEPTH OF LOOSE SOILS.

SURVEY CONTROL TABLE

PI/CURVE	PI COORDINATES		CURVE DATA RADIUS	LENGTH	TANGENT	DELTA
A	N 10,000.00	E 10,000.00	60.00'	94.25'	60.00'	90°00'00"
B	N 9,965.00	E 10,035.00	60.00'	94.25'	60.00'	90°00'00"
C	N 9,923.79	E 10,000.00	60.00'	85.10'	50.86'	80°48'56"
D	N 9,959.29	E 10,035.00	60.00'	85.10'	50.86'	80°48'56"
E	N 9,534.20	E 10,738.78	60.00'	51.70'	27.58'	49°22'10"
F	N 9,568.97	E 10,714.20	60.00'	51.70'	27.58'	49°22'10"
G	N 9,807.44	E 10,791.84	60.00'	12.02'	6.03'	11°28'50"
H	N 9,832.56	E 10,787.71	60.00'	12.02'	6.03'	11°28'50"
I	N 9,681.22	E 10,883.92	60.00'	13.56'	6.81'	12°57'10"
J	N 9,711.02	E 10,885.13	60.00'	13.56'	6.81'	12°57'10"
K	N 9,740.88	E 11,007.13	60.00'	56.81'	29.38'	52°08'50"
L	N 9,779.63	E 11,007.35	60.00'	56.81'	29.38'	52°08'50"
M	N 9,558.70	E 11,337.80	60.00'	124.83'	102.28'	119°12'14"
N	N 9,814.56	E 11,338.92	60.00'	124.83'	102.28'	119°12'14"
O	N 10,000.00	E 11,256.05	60.00'	91.31'	57.13'	87°11'28"
P	N 9,965.00	E 11,322.72	60.00'	91.31'	57.13'	87°11'28"

GROUND CONTROL BY:
GREAT WEST SURVEYORS
LAS VEGAS, NEVADA

PHOTOGRAMMETRY BY:
C & C AERIAL MAPPING CORP.
SAN DIMAS, CALIFORNIA

50 25 0 50
SCALE FEET

PROFESSIONAL ENGINEER-STATE OF NEVADA
STEPHEN L. WAMPLER
CIVIL
No. 13647

Expires 6/30/08

	DESCRIPTION	DRAWN BY	DSGN. BY	CHECK BY	APP'D BY	DATE
0	ISSUED FOR REGULATORY REVIEW	LAW	CAB		SLW	10/1/07

US Ecology Nevada
an American Ecology company

PROJECT NUMBER: 073113 DATE: 10/1/07

BEATTY NEVADA
HAZARDOUS WASTE MANAGEMENT FACILITY

EXCAVATION PLAN
PERIMETER SOILS REQUIRING RECOMPACTION
TRENCH 12

DRAWN BY	DATE	DSGN. BY	DATE	CHECK BY	DATE	APP'D BY	SCALE	JOB NO.	DRAWING NO.	REV.
LAW	9/28/07	CAB	9/28/07	SLW	9/28/07	SLW	1"=50'	073113	NV12-07-003	0

CAD FILE NAME: F:\Data\073113\T12 Design Package\subgrade design\NV12-07-003.dwg PLOT DATE: 10/1/07

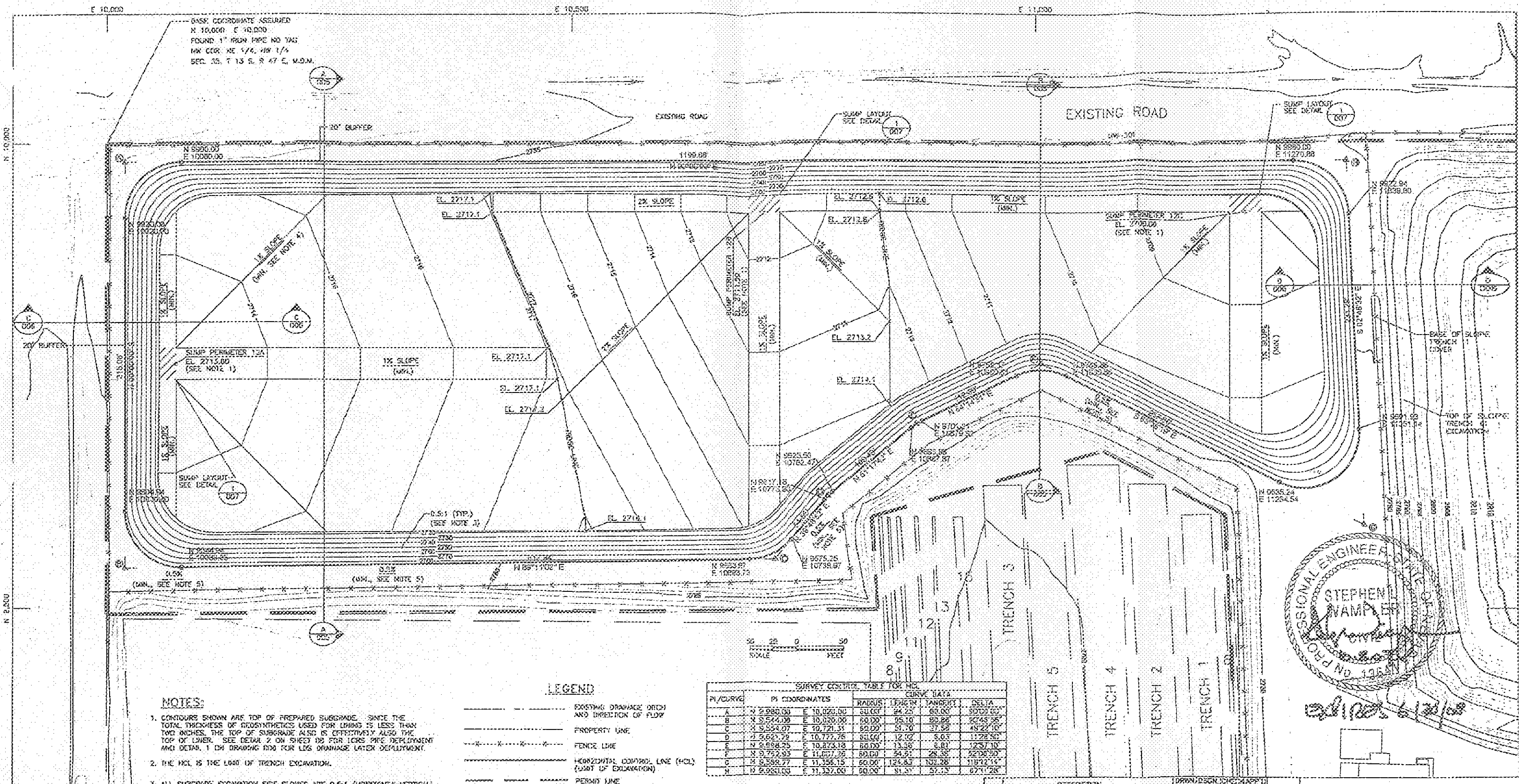

NOTES:

1. CONTOURS SHOWN ARE TOP OF PREPARED SUBGRADE. SINCE THE TOTAL THICKNESS OF GEOSYNTHETICS USED FOR LINING IS LESS THAN TWO INCHES, THE TOP OF SUBGRADE ALSO IS EFFECTIVELY ALSO THE TOP OF LINER. SEE DETAIL 2 ON SHEET 08 FOR LCRS PIPE DEPLOYMENT AND DETAIL 1 ON DRAWING 009 FOR LDS DRAINAGE LATER DEPLOYMENT.
2. THE HCL IS THE LOAD OF TRENCH EXCAVATION.
3. ALL SUBGRADE EXCAVATION SIDE SLOPES ARE 0.5:1 (HORIZONTAL:VERTICAL), EXCEPT AT CURVED SECTIONS WHERE A CONSTANT RADIUS IS MAINTAINED BELOW THE TOP OF SLOPE.
4. THE MINIMUM BOTTOM SLOPE, TOWARDS THE SUMPS IS 1% OR 2% AS INDICATED.
5. PROVIDE LOCAL GRADING AS NECESSARY TO PROVIDE DRAINAGE AWAY FROM THE HCL.
6. DURING FILLING OF TRENCH 12, PROVIDE A BERM ALONG THE TRENCH 12 TOP OF SLOPE TO PREVENT RUN-ON ONTO THE TRENCH.

LEGEND

- EXISTING DRAINAGE DITCH AND DIRECTION OF FLOW
- PROPERTY LINE
- FENCE LINE
- HORIZONTAL CONTROL LINE (HCL) (TOP OF EXCAVATION)
- PERMIT LINE
- 1' CONTOUR INTERVAL, FEET (MSL)
- 2185 — 5' OR 10' CONTOUR INTERVAL, FEET (MSL)
- SUMP AREA
- TRENCH 1 — LOW LEVEL RADIOLOGICAL WASTE TRENCH

SURVEY CONTROL TABLE FOR HCL

PI/CURVE	PI COORDINATES		CURVE DATA			
			RADIUS	LENGTH	TANGENT	DELTA
A	N 9,980.00	E 10,020.00	60.00'	94.25'	60.00'	90°00'00"
B	N 9,544.00	E 10,020.00	60.00'	95.10'	60.86'	90°45'56"
C	N 9,554.07	E 10,721.31	60.00'	51.70'	27.58'	49°22'10"
D	N 9,621.79	E 10,777.76	60.00'	12.02'	6.03'	11°28'30"
E	N 9,698.35	E 10,873.13	60.00'	13.56'	6.81'	12°57'10"
F	N 9,752.93	E 11,007.26	60.00'	54.51'	29.35'	52°06'50"
G	N 9,589.77	E 11,356.15	60.00'	124.43'	102.28'	119°12'14"
H	N 9,980.00	E 11,337.00	60.00'	91.51'	57.13'	87°12'28"

GROUND CONTROL BY:
GREAT WEST SURVEYORS
LAS VEGAS, NEVADA

PHOTOGRAMMETRY BY:
C & C AERIAL MAPPING CORP.
SAN DIMAS, CALIFORNIA

	DESCRIPTION	DRWN BY	DSGN BY	CHECK BY	APP'D BY	DATE
0	ISSUED FOR REGULATORY REVIEW	LAM	CAB		SLW	10/1/07

US Ecology Nevada
an American Ecology company

PROJECT NUMBER: 073113 DATE: 10/1/07

BEATTY, NEVADA
HAZARDOUS WASTE MANAGEMENT FACILITY

EXCAVATION PLAN
TRENCH 12

DRWN BY	DATE	DSGN BY	DATE	CHECK BY	DATE	APP'D BY	DATE	SCALE	JOB NO.	DRAWING NO.	REV.
LAM	9/28/07	CAB	9/28/07	SLW	9/28/07	SLW		1"=50'	073113	NV12--07--004	0

CAD FILE NAME: F:\Data\073113\T12 Design Package\subgrade design\NV12--07--004.dwg PLOT DATE: 10/1/07

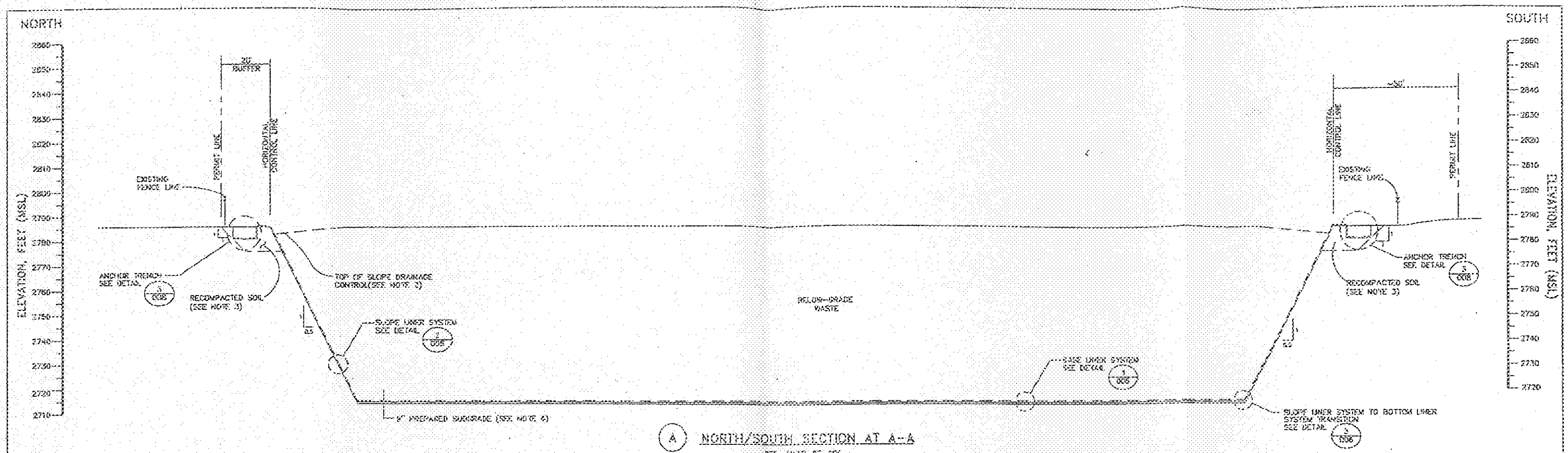

(A) NORTH/SOUTH SECTION AT A-A

REF.: NV12-07-004

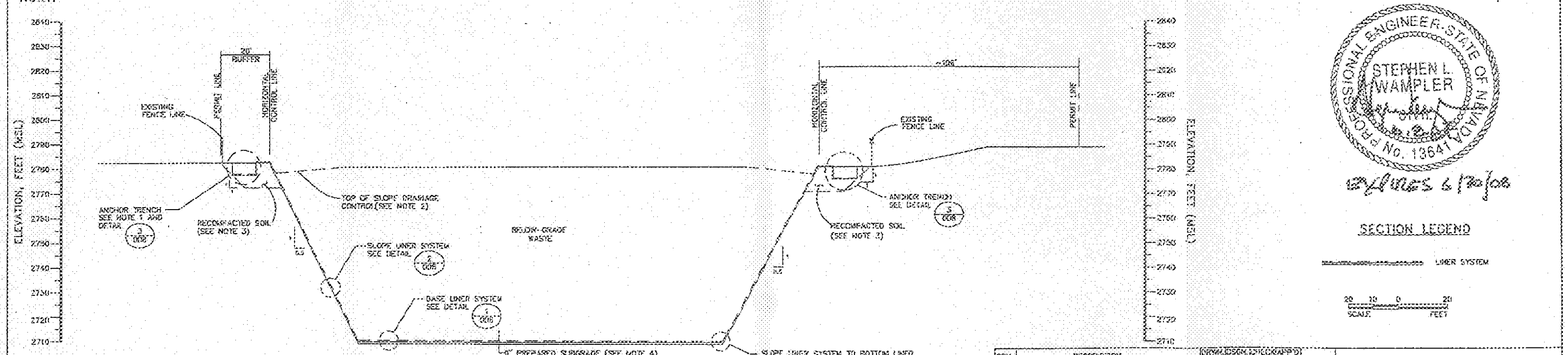

(B) NORTH/SOUTH SECTION AT B-B

REF.: NV12-07-004

PROFESSIONAL ENGINEER - STATE OF NEVADA
STEPHEN L. WAMPLER
No. 13641
CIVIL

10/1/07 6/20/08

SECTION LEGEND

LINER SYSTEM

SCALE: 20 10 0 20 FEET

NOTES:

1. ANCHOR TRENCHES ARE USED TO SECURE LINER SYSTEMS WHILE EXCAVATIONS ARE BEING FILLED.
2. KEEP WASTE 3' BELOW TOP OF SLOPE UNTIL CONSTRUCTION OF STARTER BERM.
3. RECOMPACTED SURFACE SOIL LIMITS ARE SHOWN NOMINALLY AS 10' BELOW THE TOP OF SLOPE, 10' WIDE (OFFSET TOWARD THE PERMIT LINE). ACTUAL DIMENSIONS WILL BE DETERMINED IN THE FIELD BASED ON ACTUAL DEPTH OF LOOSE SOIL.
4. PREPARED SUBGRADE THICKNESS BENEATH SUMPS IS 36 INCHES.

REV.	DESCRIPTION	DRWN BY	DSGN BY	CHCK BY	APP'D BY	DATE
0	ISSUED FOR REGULATORY REVIEW	LAM	CAB		SLW	10/1/07

USEcology Nevada
an American Ecology company

PROJECT NUMBER: 073113 DATE: 10/1/07

BEATTY NEVADA
HAZARDOUS WASTE MANAGEMENT FACILITY

CROSS SECTIONS A-A AND B-B
TRENCH 12

DRWN BY	DATE	DSGN BY	DATE	CHKD BY	DATE	APP'D BY	SCALE	JOB NO.	DRAWING NO.	REV.
LAM	9/28/07	CAB	9/28/07	SLW	9/28/07	SLW	1"=20'	073113	NV12-07-005	0

CAD FILE NAME: F:\Data\073113\112 Design Package\subgrade design\NV12-07-005.dwg

PLOT DATE: 10/1/07

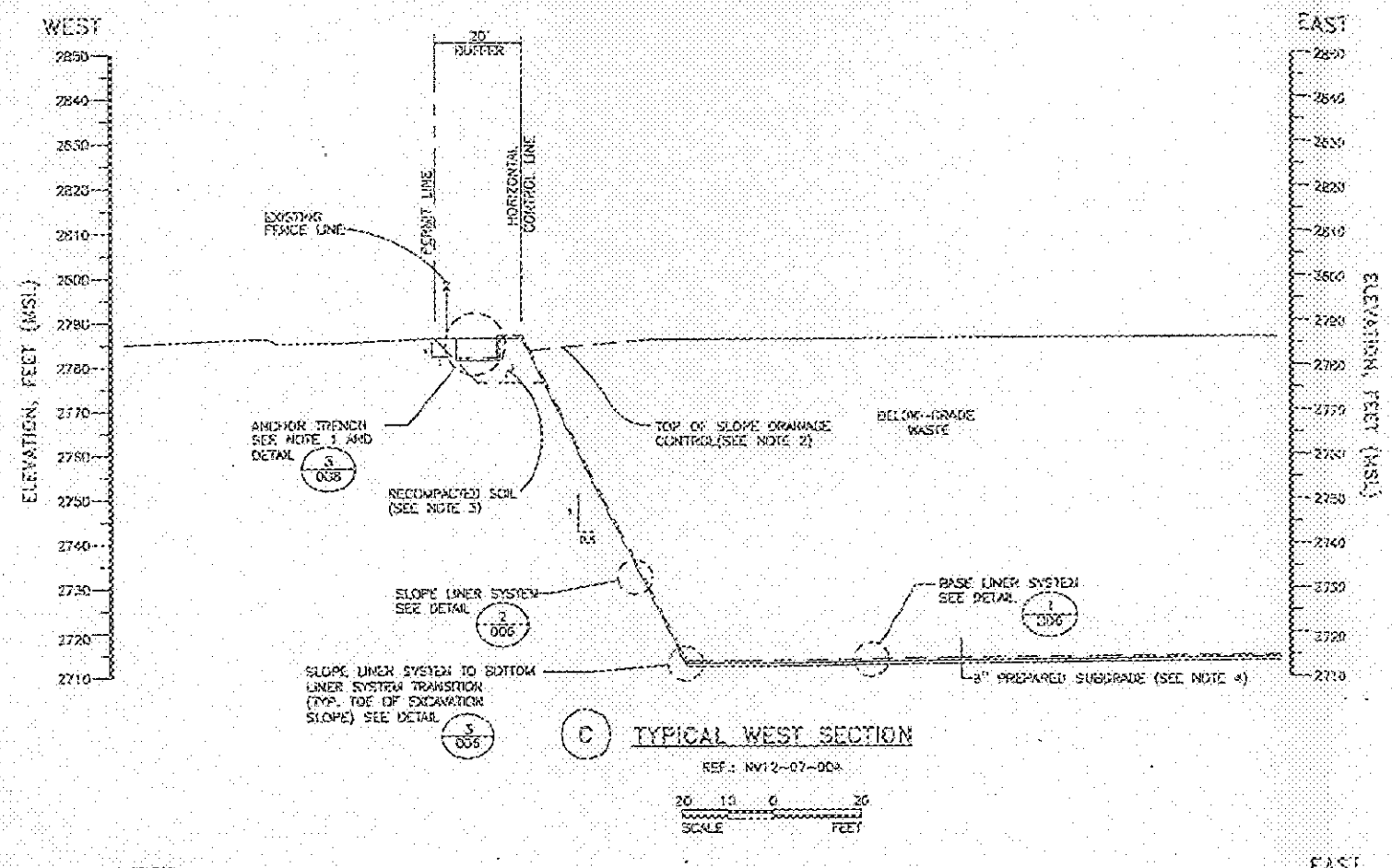

C TYPICAL WEST SECTION

REF.: NV12-07-004

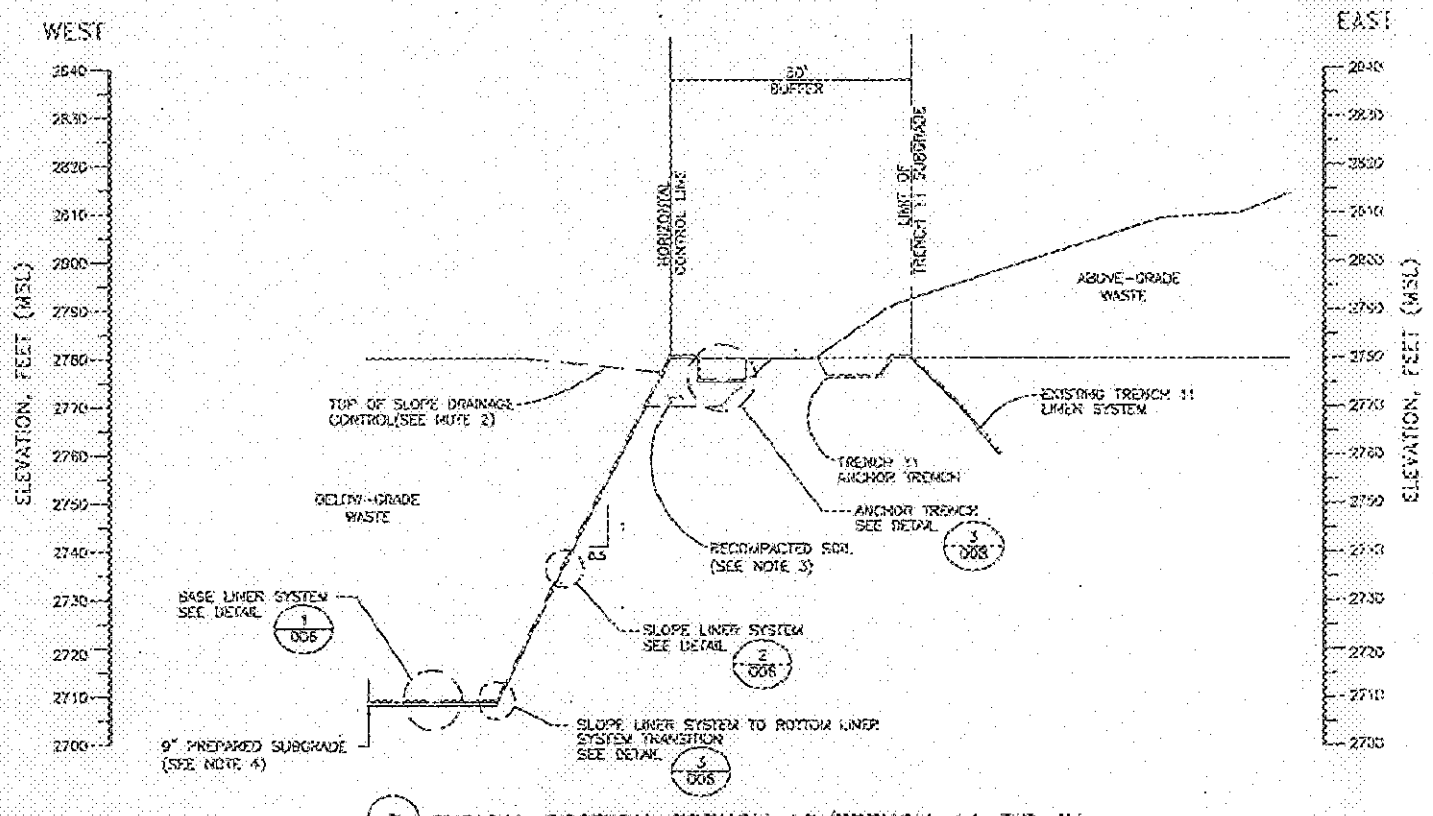

D TYPICAL SECTION–TRENCH 12/TRENCH 11 TIE-IN

REF.: NV12-07-004

NOTES:

1. ANCHOR TRENCHES ARE USED TO SECURE LINER SYSTEMS WHILE EXCAVATIONS ARE BEING FILLED.
2. KEEP WASTE 3' BELOW TOP OF SLOPE UNTIL CONSTRUCTION OF STARTER BERM.
3. RECOMPACTED SURFACE SOIL LIMITS ARE SHOWN NOMINALLY AS 10' BELOW THE TOP OF SLOPE, 10' WIDE (OFFSET TOWARD THE PERMIT LINE). ACTUAL DIMENSIONS WILL BE DETERMINED IN THE FIELD BASED ON ACTUAL DEPTH OF LOOSE SOIL.
4. PREPARED SUBGRADE THICKNESS BENEATH SUMPS IS 36 INCHES.

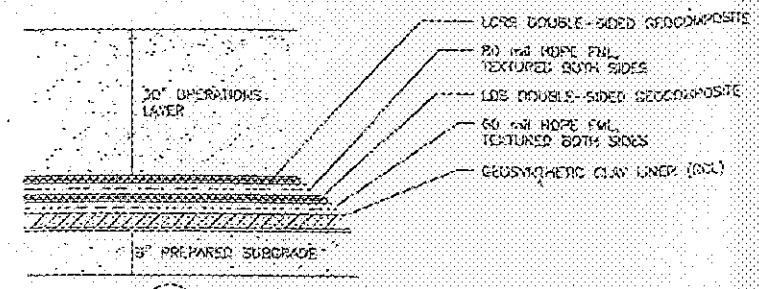

1 TYPICAL BASE LINER SYSTEM

(GEOSYNTHETICS SHOWN EXAGGERATED FOR CLARITY)

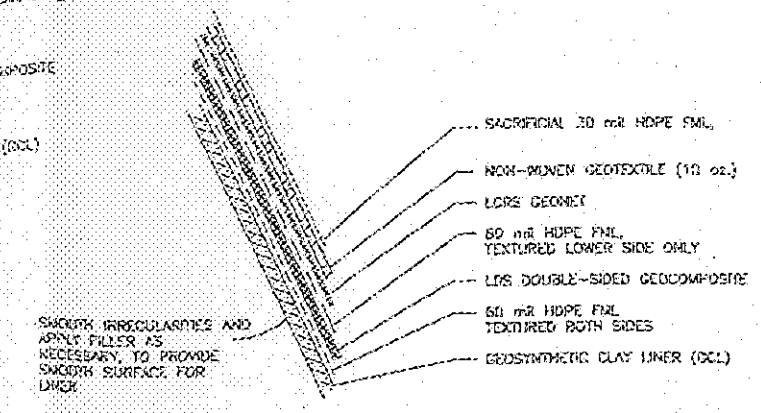

2 TYPICAL SLOPE LINER SYSTEM

(GEOSYNTHETICS SHOWN EXAGGERATED FOR CLARITY)

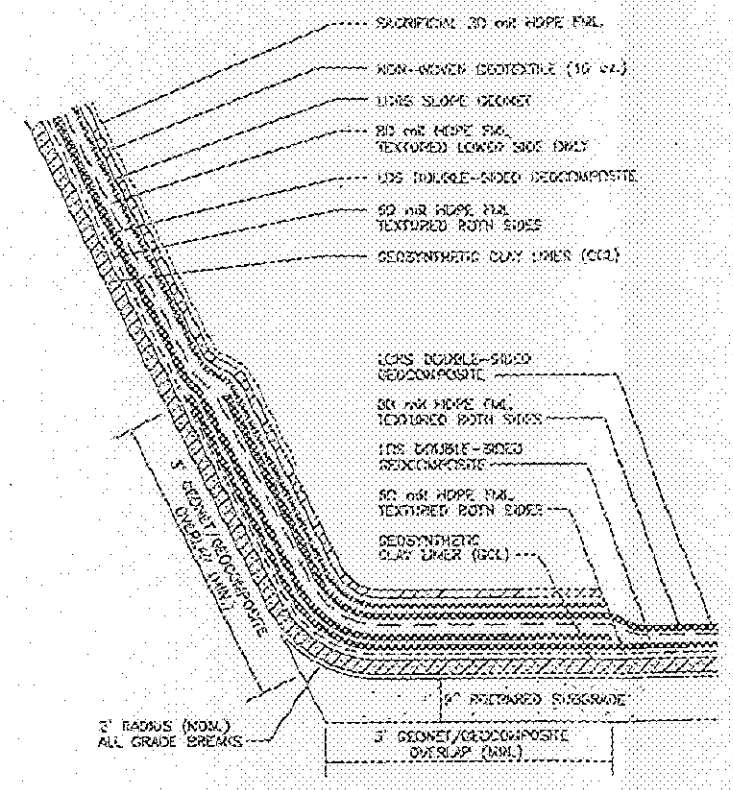

3 SLOPE LINER SYSTEM TO BASE LINER SYSTEM TRANSITION

(GEOSYNTHETICS SHOWN EXAGGERATED FOR CLARITY)

SECTION LEGEND

BASE LINER SYSTEM (DETAILS C AND D)

DETAIL LEGEND

- 10.0 oz. GEOTEXTILE
- GEONET
- DOUBLE-SIDED GEOCOMPOSITE
- 60 mil HDPE FML
- 80 mil HDPE FML
- GEOSYNTHETIC CLAY LINER (GCL)

PROFESSIONAL ENGINEER STATE OF NEVADA STEPHEN L. WAMPLER No. 13641

REV.	DESCRIPTION	DRAWN BY	DSGN BY	CHECK BY	APP'D BY	DATE
0	ISSUED FOR REGULATORY REVIEW	LAM	CAB		SLW	10/1/07

USEcology Nevada

an American Ecology company

PROJECT NUMBER: 010917 DATE: 10/1/07

BEATTY NEVADA

HAZARDOUS WASTE MANAGEMENT FACILITY

CROSS SECTIONS C-C, D-D AND LINER DETAILS, TRENCH 12

DRWN BY	DATE	DSGN BY	DATE	CHKD BY	DATE	APP'D BY	SCALE	JOB NO.	DRAWING NO.	REV
LAM	9/28/07	CAB	9/28/07	SLW	9/28/07	SLW		010917	NV12-07-006	0

CAD FILE NAME: F:\Data\073113\112 Design Package\subgrade design\NV12-07-006.dwg PLOT DATE: 10/1/07

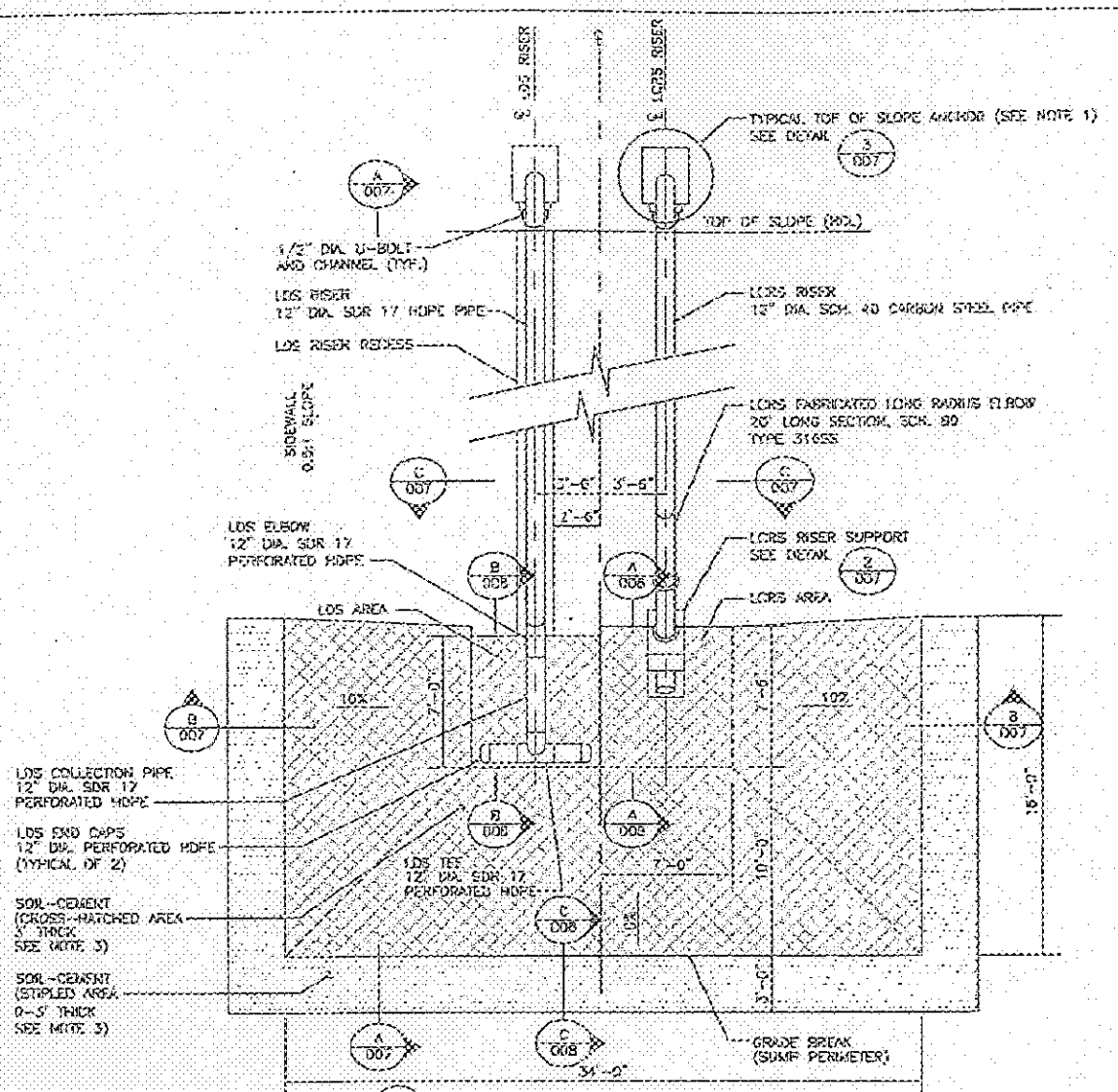

1 TYPICAL SUMP LAYOUT

(GEOSYNTHETICS AND GRAVEL NOT SHOWN FOR CLARITY)

(SEE DETAILS A, B, AND C ON SHEET NV12-07-008 FOR GEOSYNTHETICS DETAIL)

SCALE 5 2.5 0 5 FEET

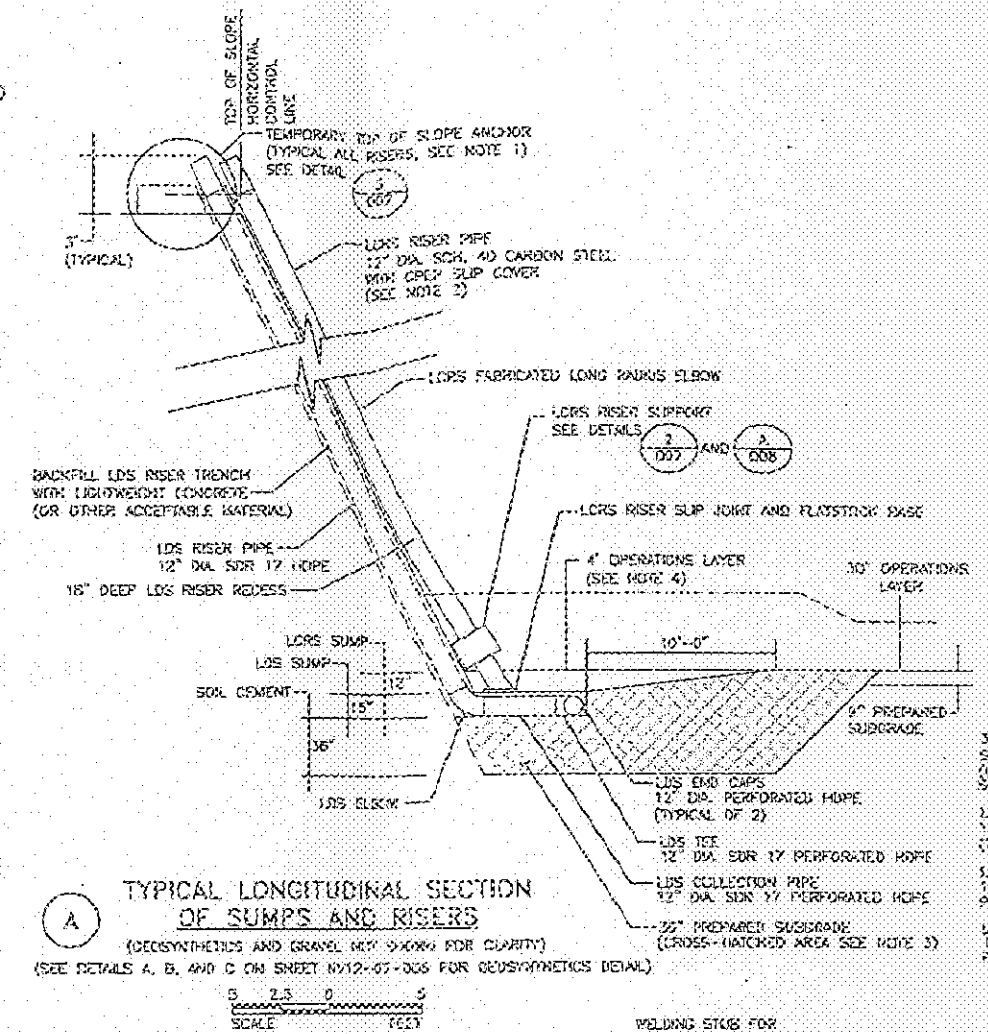

A TYPICAL LONGITUDINAL SECTION OF SUMPS AND RISERS

(GEOSYNTHETICS AND GRAVEL NOT SHOWN FOR CLARITY)

(SEE DETAILS A, B, AND C ON SHEET NV12-07-008 FOR GEOSYNTHETICS DETAIL)

SCALE 5 2.5 0 5 FEET

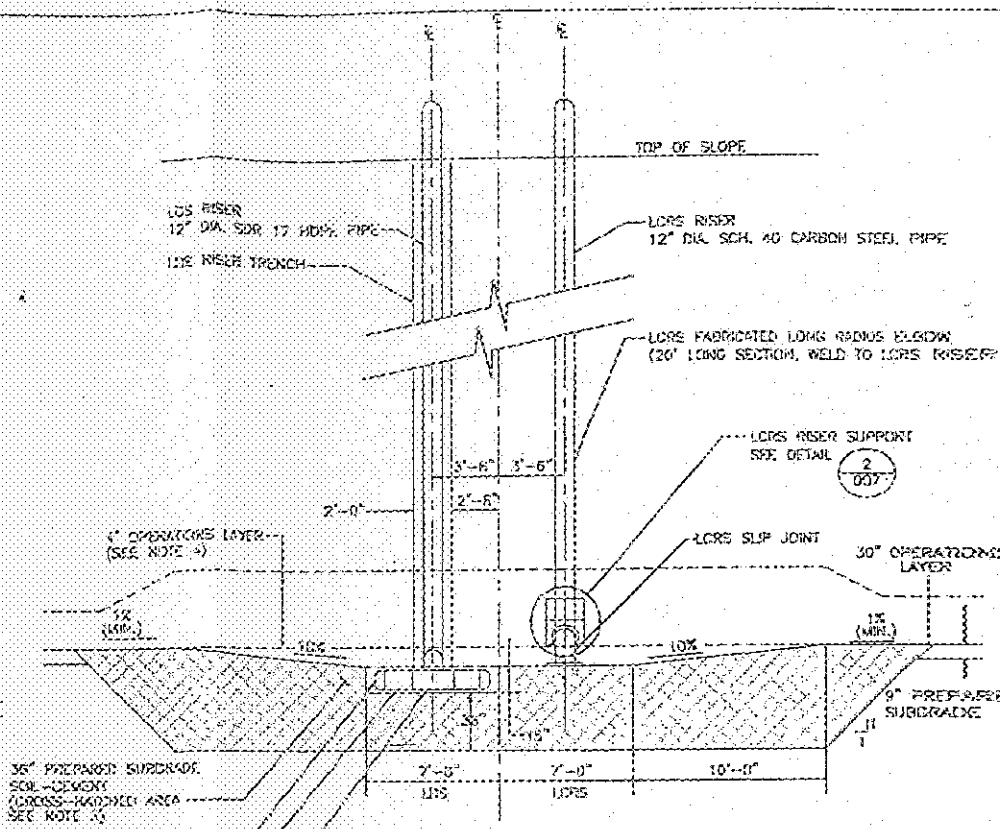

B TYPICAL TRANSVERSE SECTION OF SUMPS AND RISERS

(GEOSYNTHETICS AND GRAVEL NOT SHOWN FOR CLARITY)

(SEE DETAILS A, B, AND C ON SHEET NV12-07-008 FOR GEOSYNTHETICS DETAIL)

SCALE 5 2.5 0 5 FEET

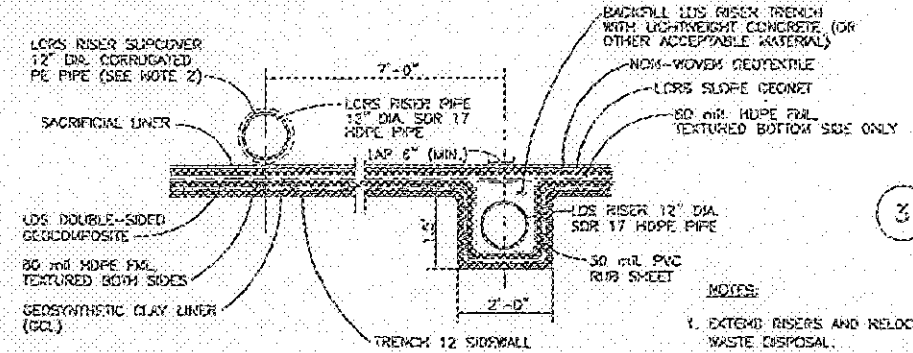

C TYPICAL SIDEWALL SECTION SHOWING RISERS AND RECESS

(GEOSYNTHETICS SHOWN EXAGGERATED FOR CLARITY)

SEE DRAWING 008 FOR DETAIL LEGEND

SCALE 2 1 0 2 FEET

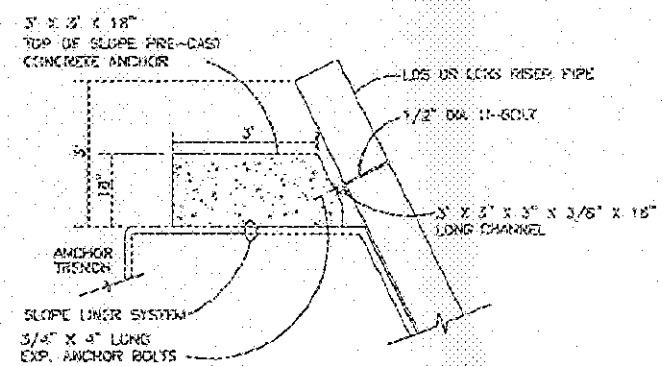

3 TYPICAL TOP OF SLOPE RISER PIPE ANCHOR

SCALE 2 1 0 2 FEET

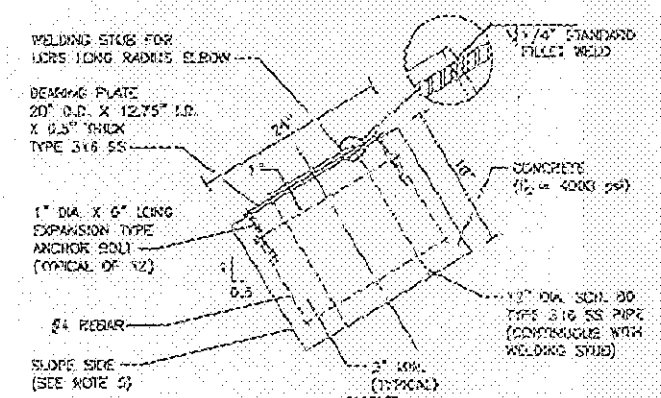

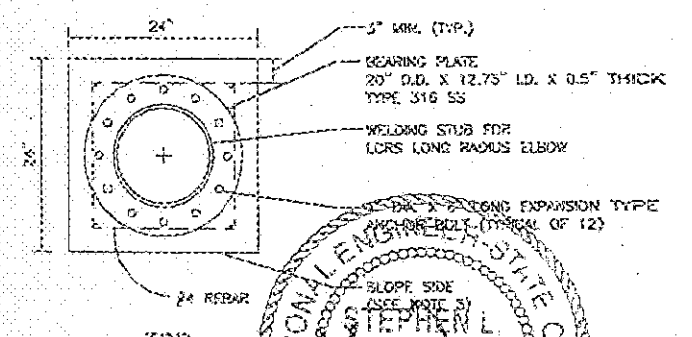

2 LCRS RISER SUPPORT

SCALE 1 0.5 0 FEET

PROFESSIONAL ENGINEER — STATE OF NEVADA — STEPHEN L. WAMPLER — CIVIL — No. 13641

REV.	DESCRIPTION	DRAWN BY	DSGN BY	CHECK BY	APP'D BY	DATE
0	ISSUED FOR REGULATORY REVIEW	LAM	CAB		SLW	10/1/07

USEcology Nevada

an American Ecology company

PROJECT NUMBER: 010917 DATE: 10/3/07

BEATTY NEVADA

HAZARDOUS WASTE MANAGEMENT FACILITY

SUMP DETAILS

TRENCH 12

DRAWN BY	DATE	DESIGN BY	DATE	CHKD BY	DATE	APP'D BY	SCALE	JOB NO.	DRAWING NO.	REV
LAM	9/28/07	CAB	9/28/07	SLW	9/28/07	SLW		010917	NV12-07-007	0

CAD FILE NAME: S:\Data\073113\T12 Design Package\subgrade design\NV12-07-007.dwg PLOT DATE: 10/3/07

NOTES:

1. EXTEND RISERS AND RELOCATE ANCHORS TO ACCOMMODATE ABOVE-GRADE WASTE DISPOSAL.
2. THE SUMP COVER IS SPLIT LONGITUDINALLY AND PLACED OVER THE LCRS RISER TO PREVENT WASTE SETTLEMENT FROM TRANSFERRING LOADS TO THE LCRS RISER OR LINER SYSTEM. USE 10' SECTIONS OF CORRUGATED POLYETHYLENE (CPEP) PIPE (OR ACCEPTABLE ALTERNATIVE), CUT TO FIT AS NECESSARY, AND DO NOT JOIN ADJACENT SECTIONS.
3. IN LDS SUMP AREA ADD 3-5% CEMENT (OR OTHER ACCEPTABLE MATERIAL) TO SUBGRADE TO PROVIDE SUFFICIENT COHESION TO ALLOW BOX CUT.
4. FOUR FEET OF OPERATIONS LAYER IS PROVIDED OVER THE SUMPS TO PROVIDE ADDITIONAL LATERAL SUPPORT FOR THE RISERS.
5. THE LCRS RISER SUPPORT SHOULD BE CAST-IN-PLACE. (SEE SECTION A ON DRAWING 008 AND DETAIL 002 ON DRAWING 007) THE SLOPE SIDE SHOULD BE FLUSH WITH THE EXCAVATION SIDEWALL. THE TOP AND BOTTOM SHOULD BE CAST SO AS TO BE SQUARE WITH THE LCRS LONG RADIUS ELBOW.

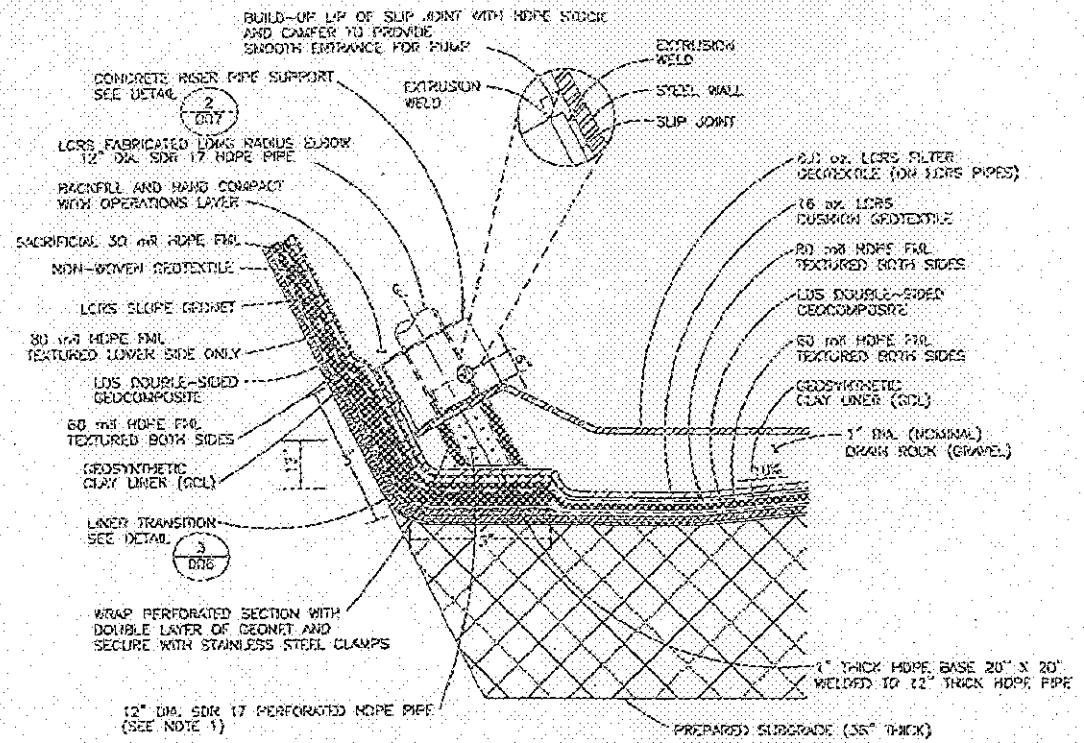

A DETAIL OF LCRS SUMP AND RISER

(GEOSYNTHETICS SHOWN EXAGGERATED FOR CLARITY)

REF.: NV12-07-007

2 1 0 2 SCALE FEET

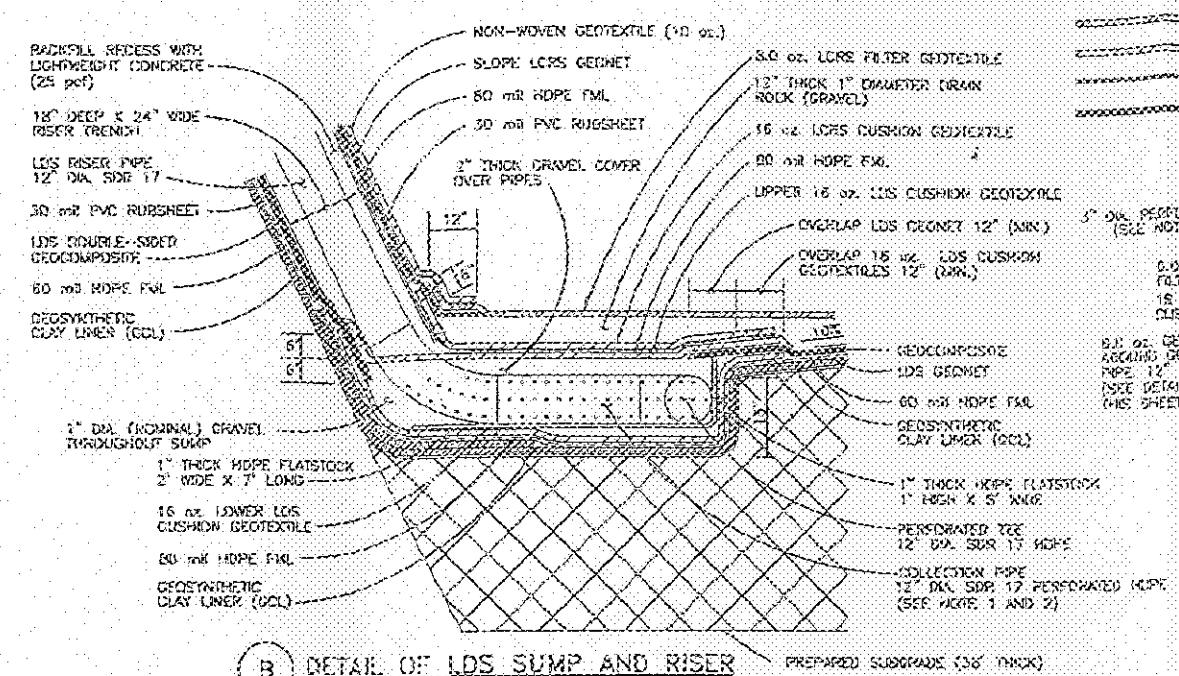

B DETAIL OF LDS SUMP AND RISER

(GEOSYNTHETICS SHOWN EXAGGERATED FOR CLARITY)

REF.: NV12-07-007

2 1 0 2 SCALE FEET

DETAIL LEGEND

- 8.0 oz. GEOTEXTILE
- 16 oz. GEOTEXTILE
- GEONET
- DOUBLE-SIDED GEOCOMPOSITE
- 30 mil HDPE FML
- 80 mil HDPE FML
- 20 mil HDPE FML
- GEOSYNTHETIC CLAY LINER (GCL)

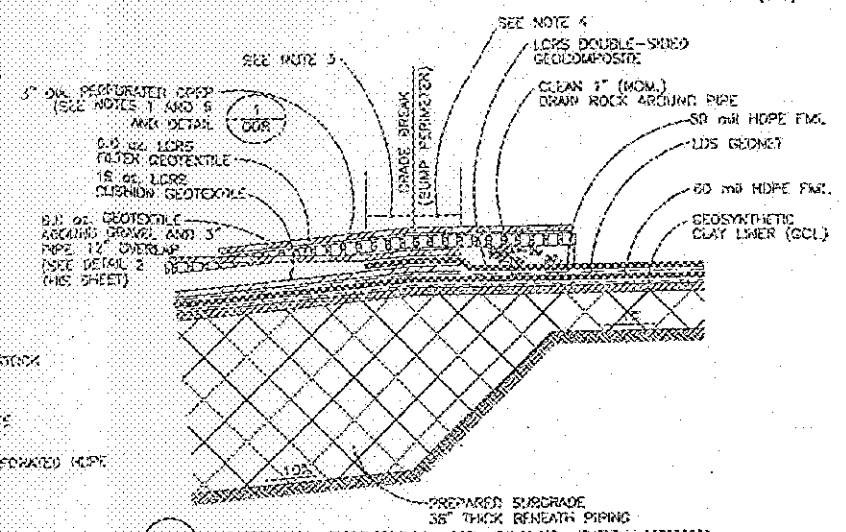

C DETAIL SECTION AT SUMP PERIMETER

(GEOSYNTHETICS SHOWN EXAGGERATED FOR CLARITY)

REF.: NV12-07-007

2 1 0 2 SCALE FEET

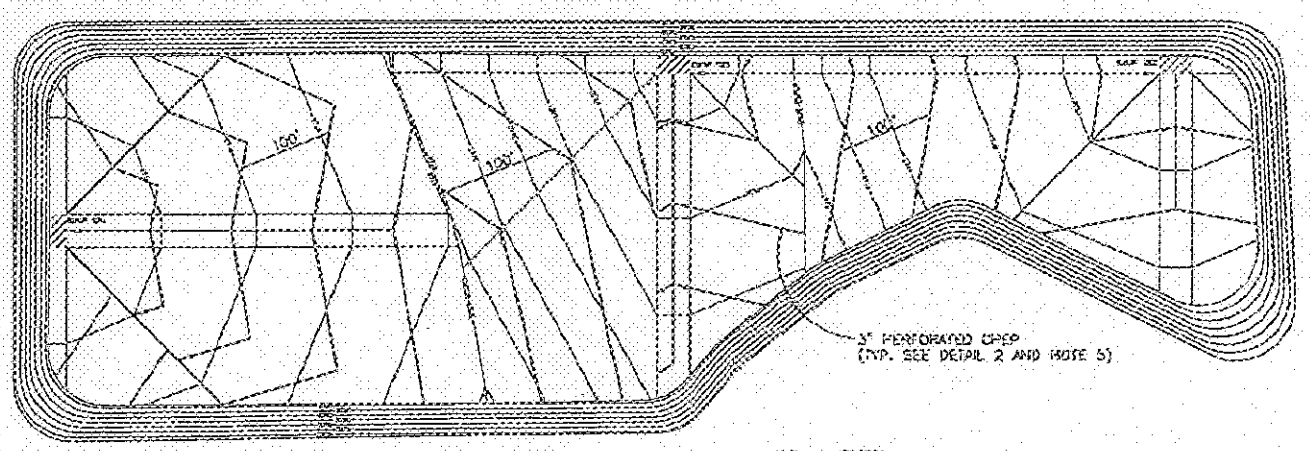

1 DEPLOYMENT LCRS PIPES

REF.: NV12-07-004

100 50 0 100 SCALE FEET

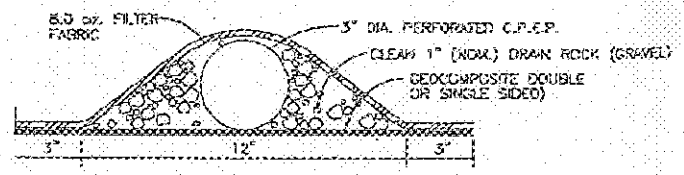

2 TYPICAL C.P.E.P SECTION

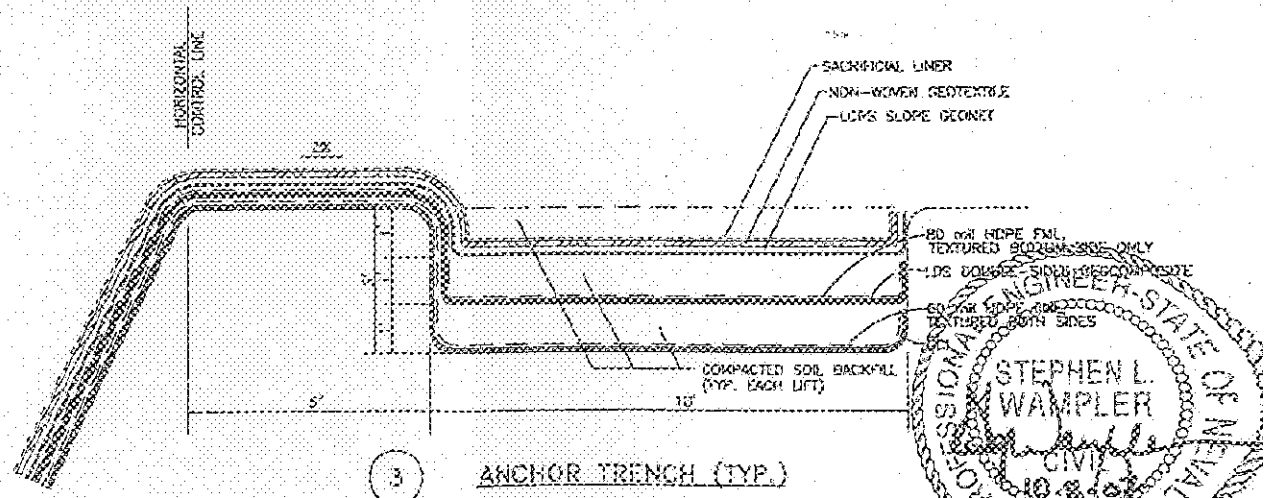

3 ANCHOR TRENCH (TYP.)

(GEOSYNTHETICS SHOWN EXAGGERATED FOR CLARITY)

REF: NV12-07-005 AND NV12-07-006

2 1 0 2 SCALE FEET

STEPHEN L. WAMPLER CIVIL No. 13641 PROFESSIONAL ENGINEER STATE OF NEVADA

Expires 6/30/08

NOTES:

1. PERFORATIONS ARE 1/2" DIA. HOLES @ 60°; 24 HOLES PER FOOT.
2. DOUBLE LAYER OF GEONET AND SECURE WITH STAINLESS STEEL CLAMPS.
3. EXTEND LCRS GEOCOMPOSITE 12" (MIN.) INTO SUMP.
4. EXTEND 8.0 oz. FILTER AND 16 oz. LCRS CUSHION GEOTEXTILES 12" (MIN.) PAST GRADE BREAK.
5. CPEP = CORRUGATED POLYETHYLENE PIPE
6. CPEP PIPE PENETRATES UPPER GEOTEXTILE AT SUMP PERIMETER

REV.	DESCRIPTION	DRAWN BY	DESGN BY	CHECK BY	APP'D BY	DATE
0	ISSUED FOR REGULATORY REVIEW	LAM	CAB		SLW	10/1/07

USEcology Nevada

an American Ecology company

PROJECT NUMBER: 010917 DATE: 10/1/07

BEATTY NEVADA

HAZARDOUS WASTE MANAGEMENT FACILITY

SUMP AND MISCELLANEOUS DETAILS

TRENCH 12

DRAWN BY	DATE	DESGN BY	DATE	CHKD. BY	DATE	APP'D BY	SCALE	JOB NO.	DRAWING NO.	REV
LAM	9/28/07	CAB	9/28/07	SLW	9/28/07	SLW		010917	NV12-07-008	0

CAD FILE NAME: F:\Data\073113\T12 Design Package\subgrade design\NV12-07-008.dwg PLOT DATE: 10/1/0