Hydrology and Floodplain Analysis

Philip B. Bedient • Wayne C. Huber

REF 2

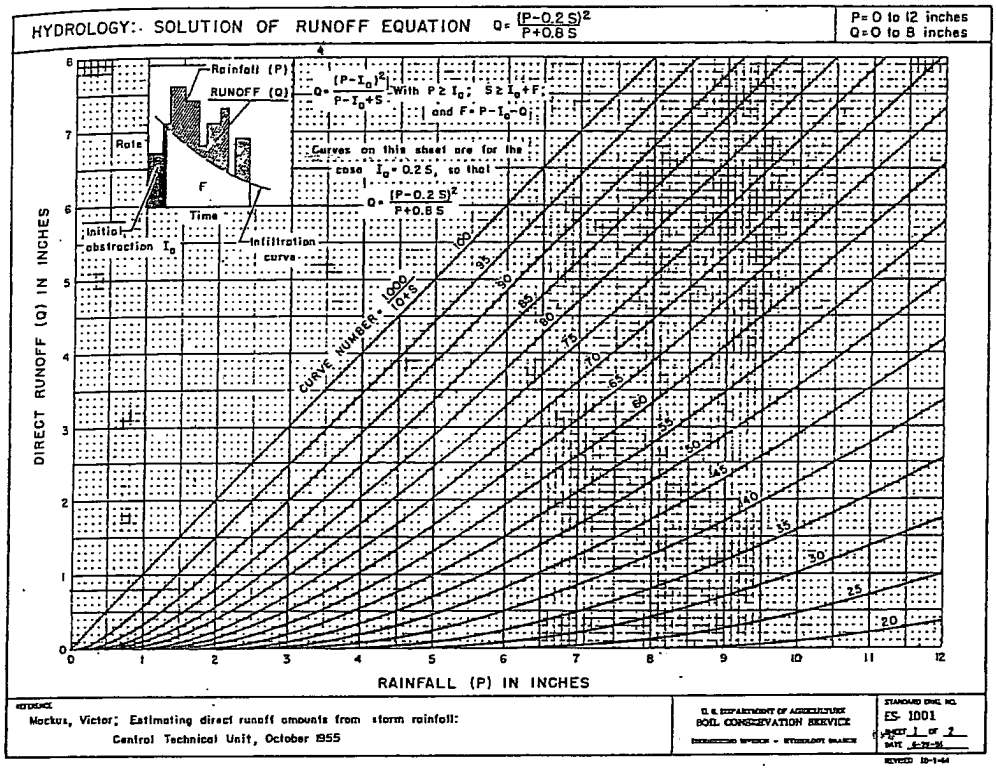

FIGURE 2.14

Graphical solution of rainfall-runoff equation.

EXAMPLE 2.8

SCS UNIT HYDROGRAPH

For the watershed of Example 2.7, develop a unit hydrograph using the SCS method. The watershed consists of meadows in good condition with soil group D. The average slope in the watershed is 100 ft/mi. Assume the same duration of rainfall as found in Example 2.7. Sketch the resulting hydrograph.

SOLUTION

Equation (2.18) gives the following relationship for t_p:

$$t_p = \frac{\ell^{0.8}(S+1)^{0.7}}{1900y^{1/2}}.$$

From Table 2.1, the SCS curve number is found to be 78. Therefore,

Since this is a small watershed,

$$T_b \approx 4t_p = 4(8.6) \text{ hr}$$

$$\boxed{T_b = 34.4 \text{ hr.}}$$

And the duration of rainfall

$$D = t_p/5.5$$
$$= 8.6/5.5 \text{ hr}$$

$$\boxed{D = 1.6 \text{ hr.}}$$

SCS Method

The method developed by the Soil Conservation Service (SCS, 1957) is based on a **dimensionless hydrograph**, developed from a large number of unit hydrographs ranging in size and geographic location. The hydrograph is represented as a simple triangle (Fig. 2.13), with rainfall duration D (hr), time of rise T_R (hr), time of fall B(hr), and peak flow Q_p (cfs). The volume of direct runoff is

$$\text{Vol} = \frac{Q_p T_R}{2} + \frac{Q_p B}{2}, \qquad \text{or}$$

$$Q_p = \frac{2 \text{ Vol}}{T_R + B} \tag{2.14}$$

From a review of a large number of hydrographs, it was found that

$$B = 1.67\, T_R. \tag{2.15}$$

Therefore, Eq. (2.14) becomes, for 1.0 in. of rainfall excess,

$$Q_p = \frac{0.75 \text{ Vol}}{T_R}$$
$$= \frac{(0.75)(640)A(1.008)}{T_R}$$
$$= \frac{484A}{T_R}, \tag{2.16}$$

REF 23

where

A = area of basin (sq mi),

T_R = time of rise (hr).

Capece et al. (1984) found that a factor as low as 10–50 holds for flat, high-water-table watersheds rather than the value 484 presented here. Thus, care must be used when applying this method.

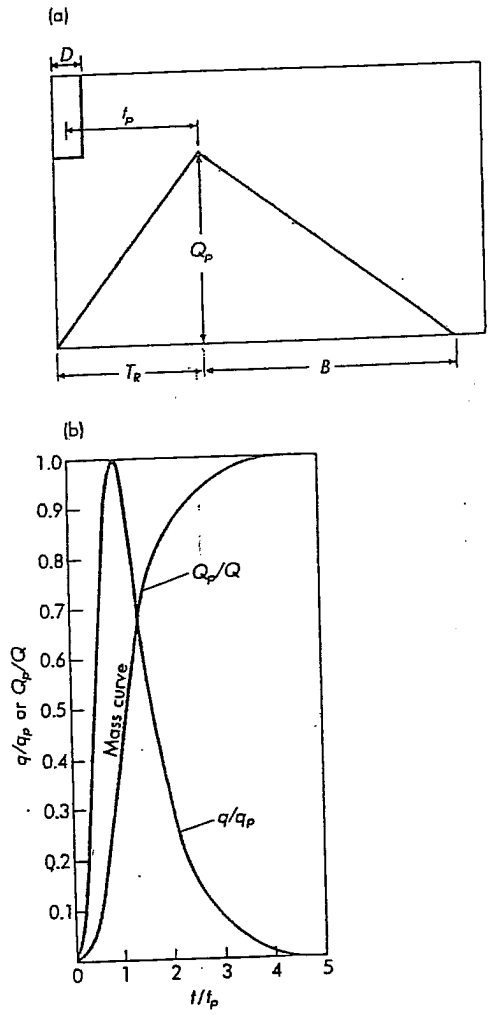

FIGURE 2.13
(a) SCS triangular unit hydrograph. (b) SCS dimensionless unit hydrograph (SCS, 1964).

From Fig. 2.13 it can be shown that

$$T_R = D/2 + t_p, \qquad (2.17)$$

REF 2C

where

D = rainfall duration (hr),

t_p = lag time from centroid of rainfall to Q_p (hr).

Lag time t_p is estimated from any one of several empirical equations used by the SCS, such as

$$t_p = \frac{\ell^{0.8}(S+1)^{0.7}}{1900y^{0.5}}, \quad \text{REF 20} \tag{2.18}$$

where

t_p = lag time (hr),
ℓ = length to divide (ft),
y = average watershed slope (%),
$S = 1000/\text{CN} - 10$,
CN = curve number for various soil/land use (see Table 2.1).

The SCS dimensionless unit hydrograph can be used to develop a curved hydrograph, using the same t_p and Q_p as the triangular hydrograph in Fig. 2.13.

Soil Conservation Service (1964) runoff estimates assume a relationship between accumulated total storm rainfall P, runoff Q, and infiltration plus initial abstraction $(F + I_a)$. It is assumed that

$$F/S = Q/P_e, \tag{2.19}$$

where F is infiltration occurring after runoff begins, S is potential abstraction, Q is direct runoff in in., and P_e is effective storm runoff $(P - I_a)$. With $F = (P_e - Q)$ and $P_e = (P - I_a) = (P - 0.2S)$ based on data from small watersheds,

$$Q = \frac{(P - 0.2S)^2}{P + 0.8S}. \tag{2.20}$$

The SCS method uses the **runoff curve number** CN, which is related to storage by

$$\text{CN} = 1000/(S + 10), \quad \text{REF 2E} \tag{2.21}$$

where potential abstraction S (in.) becomes

$$S = (1000/\text{CN}) - 10. \tag{2.22}$$

Figure 2.14 presents the SCS solution in graphical form for a range of CNs and rainfall amounts. Runoff curve numbers for selected land uses are presented in Table 2.1. The hydrologic soil group varies from A for sandy, well-drained soils to D for clayey, poorly drained soils. The SCS report *Urban Hydrology for Small Watersheds* (1986) provides a simple graphical and tabular procedure for determining peak flows for urban areas. Example 2.8 illustrates the SCS UH method.

United States
Environmental Protection
Agency

Office of Research and
Development
Washington DC 20460

EPA/600/R-94/168b
September 1994

3
REF

EPA

The Hydrologic Evaluation of Landfill Performance (HELP) Model

Engineering Documentation for Version 3

REF 9A
3

TABLE 1. DEFAULT LOW DENSITY SOIL CHARACTERISTICS

Soil Texture Class			Total Porosity vol/vol	Field Capacity vol/vol	Wilting Point vol/vol	Saturated Hydraulic Conductivity cm/sec
HELP	USDA	USCS				
1	CoS	SP	0.417	0.045	0.018	1.0×10^{-2}
2	S	SW	0.437	0.062	0.024	5.8×10^{-3}
3	FS	SW	0.457	0.083	0.033	3.1×10^{-3}
4	LS	SM	0.437	0.105	0.047	1.7×10^{-3}
5	LFS	SM	0.457	0.131	0.058	1.0×10^{-3}
6	SL	SM	0.453	0.190	0.085	7.2×10^{-4}
7	FSL	SM	0.473	0.222	0.104	5.2×10^{-4}
8	L	ML	0.463	0.232	0.116	3.7×10^{-4}
9	SiL	ML	0.501	0.284	0.135	1.9×10^{-4}
10	SCL	SC	0.398	0.244	0.136	1.2×10^{-4}
11	CL	CL	0.464	0.310	0.187	6.4×10^{-5}
12	SiCL	CL	0.471	0.342	0.210	4.2×10^{-5}
13	SC	SC	0.430	0.321	0.221	3.3×10^{-5}
14	SiC	CH	0.479	0.371	0.251	2.5×10^{-5}
15	C	CH	0.475	0.378	0.251	2.5×10^{-5}
21	G	GP	0.397	0.032	0.013	3.0×10^{-1}

a = constant representing the effects of various fluid constants and gravity, 21 cm^3/sec

ϕ = total porosity, vol/vol

θ_r = residual volumetric water content, vol/vol

ψ_b = bubbling pressure, cm

λ = pore-size distribution index, dimensionless

A more detailed explanation of Equation 11 can be found in Appendix A of the HELP program Version 3 User's Guide and the cited references.

Saturated Hydraulic Conductivity

Saturated hydraulic conductivity is used to describe flow through porous media where the void spaces are filled with a wetting fluid (e.g., water). The saturated hydraulic conductivity of each layer is specified in the input. Equations for estimating the hydraulic conductivity for soils and other materials are presented in Appendix A of the HELP Program Version 3 User's Guide.

Unsaturated Hydraulic Conductivity

Unsaturated hydraulic conductivity is used to describe flow through a layer when the void spaces are filled with both wetting and non-wetting fluid (e.g., water and air). The HELP program computes the unsaturated hydraulic conductivity of each soil and waste layer using the following equation, reported by Campbell (1974):

REF 2B 3

$$K_u = K_s \left[\frac{\theta - \theta_r}{\phi - \theta_r} \right]^{3+\left(\frac{2}{\lambda}\right)} \tag{5}$$

where

K_u = unsaturated hydraulic conductivity, cm/sec

K_s = saturated hydraulic conductivity, cm/sec

θ = actual volumetric water content, vol/vol

θ_r = residual volumetric water content, vol/vol

ϕ = total porosity, vol/vol

λ = pore-size distribution index, dimensionless

Residual volumetric water content is the amount of water remaining in a layer under infinite capillary suction. The HELP program uses the following regression equation, developed using mean soil texture values from Rawls et al. (1982), to calculate the residual volumetric water content:

REF 2C 3

$$\theta_r = \begin{cases} 0.014 + 0.25\,WP & \text{for } WP \geq 0.04 \\ 0.6\,WP & \text{for } WP < 0.04 \end{cases} \tag{6}$$

where

WP = volumetric wilting point, vol/vol

The residual volumetric water content and pore-size distribution index are constants in the Brooks-Corey equation relating volumetric water content to matrix potential (capillary pressure and adsorptive forces) (Brooks and Corey, 1964):

REF 2D

$$\frac{\theta - \theta_r}{\phi - \theta_r} = \left(\frac{\psi_b}{\psi}\right)^{\lambda} \tag{7}$$

where

ψ = capillary pressure, bars

ψ_b = bubbling pressure, bars

Bubbling pressure is a function of the maximum pore size forming a continuous network of flow channels within the medium (Brooks and Corey, 1964). Brakensiek et al. (1981) reported that Equation 7 provided a reasonably accurate representation of water retention and matrix potential relationships for tensions greater than 50 cm or 0.05 bars (unsaturated conditions).

The HELP program solves Equation 7 for two different capillary pressures simultaneously to determine the bubbling pressure and pore-size distribution index of volumetric moisture content for use in Equation 7. The total porosity is known from the input data. The capillary pressure-volumetric moisture content relationship is known at two points from the input of field capacity and wilting point. Therefore, the field capacity is inserted in Equation 7 as the volumetric moisture content and 0.33 bar is inserted as the capillary pressure to yield one equation. Similarly, the wilting point and 15 bar are inserted in Equation 7 to yield a second equation. Having two equations and two unknowns (bubbling pressure and pore-size distribution index), the two equations are solved simultaneously to yield the unknowns. This process is repeated for each layer to obtain the parameters for computing moisture retention and unsaturated drainage.

3.3.3 Saturated Hydraulic Conductivity for Vegetated Materials

The HELP program adjusts the saturated hydraulic conductivities of soils and waste layers in the top half of the evaporative zone whenever those soil characteristics were selected from the default list of soil textures. This adjustment, developed for the model from changes in runoff characteristics and minimum infiltration rates as function of vegetation, is made to account for channeling due to root penetration. These adjustments for vegetation are not made for user-specified soil characteristics; they are made only for default soil textures, which assumed that the soil layer is unvegetated and free of continuous root channels that provide preferential drainage paths. The HELP program calculates the vegetated saturated hydraulic conductivity as follows:

LDS Flow Capacity (Action Leakage Rate) and Pump Sizing

Figure 1

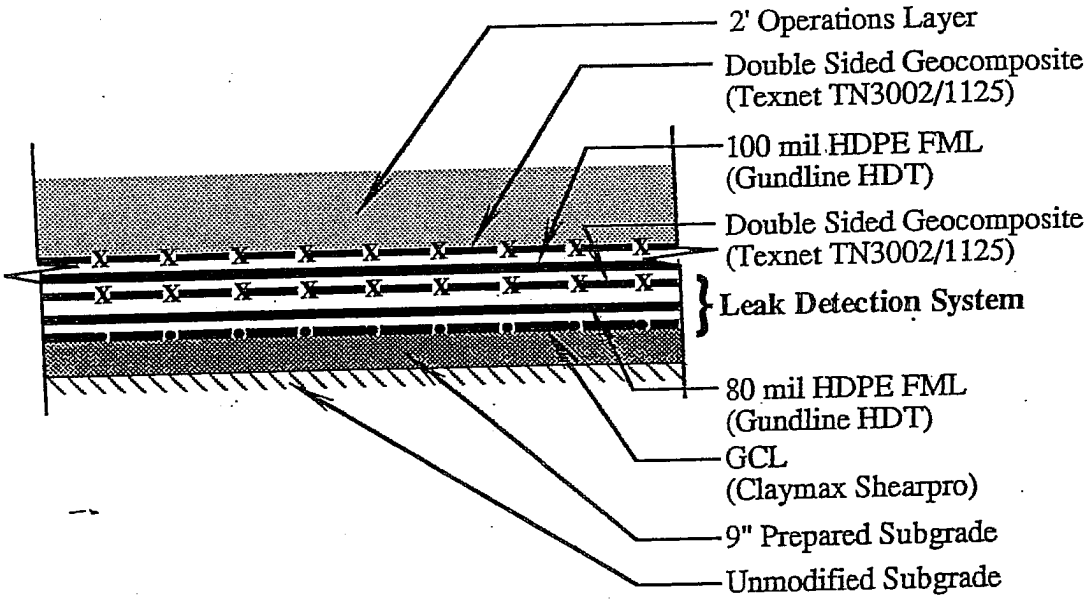

2. The sump locations are shown on Figure 2 (Attached). There are three sumps proposed for Cell 12. The typical geometry is shown in Figure 3 (Attached).

Flow Capacities

1. The following flow elements will be used in the LDS

   - Double sided geocomposite (Texnet TN3002/1125)
   - Geonet (Polynet PN3000)-used in the sump areas if additional flow capacity is required.
   - Gravel (clean, poorly graded, nominal 3/4" diameter)-used in the sump proper only.

2. The double sided geocomposite is used in the slope liner LDS as well as in the bottom liner as shown in Figure 1. A continuous strip of geocomposite will be used for each system. Therefore flow within the LDS will be controlled by the minimum bottom slope.

3. Flow within the geosynthetics is calculated using Darcy's Equation (which assumes laminar flow within the net) as follows (Reference 2A):

LDS Flow Capacity (Action Leakage Rate) and Pump Sizing

$$q = \Theta_{eff} i \qquad (1)$$

Where:

q = flow per unit width

Θ_{eff} = effective transmissivity

i = hydraulic gradient

Flow within the gravel also uses Darcy's formula, however, transmissivity is replaced with hydraulic conductivity and the thickness of the flow area.

4. Effective transmissivity for the geosynthetics is calculated by applying several safety factors to the published transmissivity value. The following formula (Reference 2B) is used for that calculation, definitions are provided in the attached reference:

$$\Theta_{eff} = \frac{\Theta}{(FS_{CR} \times FS_{IN} \times FS_{CC} \times FS_{BC})} \qquad (2)$$

5. The following table shows the unit flow capacity for the geosynthetic elements and the gravel based on the applicable transmissivity, or hydraulic conductivities, hydraulic gradients, and safety factors:

Table 1

Flow Element	Q	FS_{CR}	FSI_N	FS_{CC}	FS_{BC}	Q_{eff}[1]	i	q	q
Units:	m2/s	NA	NA	NA	NA	m2/s	NA	m3/m-s	gal/ft-day
TN3002/1125	2.20E-04	1.4	1.5	1.5	1.5	4.66E-05	0.01	4.66E-07	3.24
PN3000	2.00E-03	1.4	1.5	1.5	1.5	4.23E-04	0.01	4.23E-06	29.45
TN3002/1125	2.20E-04	1.4	1.5	1.5	1.5	4.66E-05	0.1	4.66E-06	32.39
PN3000	2.00E-03	1.4	1.5	1.5	1.5	4.23E-04	0.1	4.23E-05	294.47

Transmissivity values are provided by the manufacturer (Reference 3A and 3B). Safety factors are taken from the literature and are attached (Reference 2C). Flow capacities are shown at hydraulic gradients of 1 percent and 10 percent for the nominal cell bottom slope and the minimum sump slope, respectively. Since the gravel is used only within the minimum sump boundaries around the riser pipes, flow capacities are calculated for the geosynthethics only.

Controlling Section

1. As shown in Figure 3 there are two potentially controlling sections: 1) the 7'x7' LDS perimeter; and 2) the perimeter at the grade break between the 1 and 10 percent slopes. In the controlling sections multiple layers of geocomposite or geonet alone may be used to provide sufficient flow capacity.

[1] The effective transmissivity of the geocomposite (using the factors of safety listed in Table 1) still exceeds the minimum transmissivity requirement (3×10^{-5} m^2/s) of 40 CFR § 264.301(c)(3)(ii).

Attachment B

REF 3A
φ

TEX-NET TN3002/1125

plate/FRICTION SEAL/TN3002/1125/FRICTION SEAL/plate

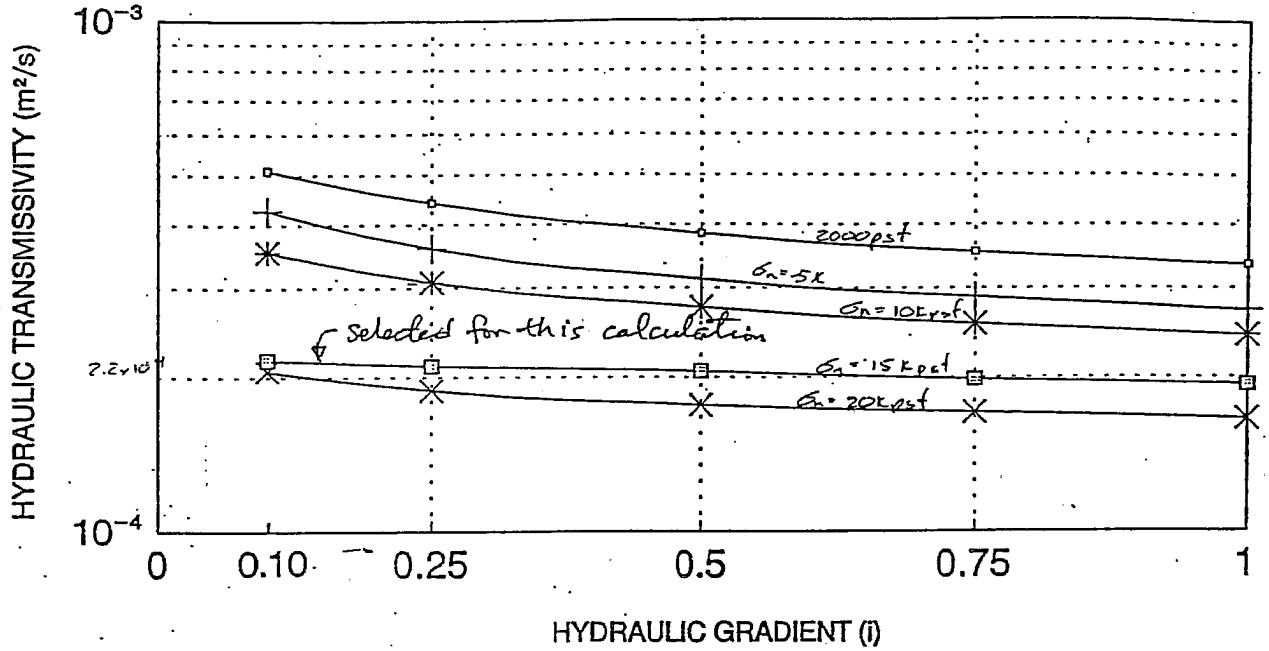

▫	2000 psf
+	5000 psf
✳	10000 psf
⊡	15000 psf
×	20000 psf

TEX-NET TN3002CN/1125

plate/FRICTION SEAL/TN3002CN/1125/FRICTION SEAL/plate

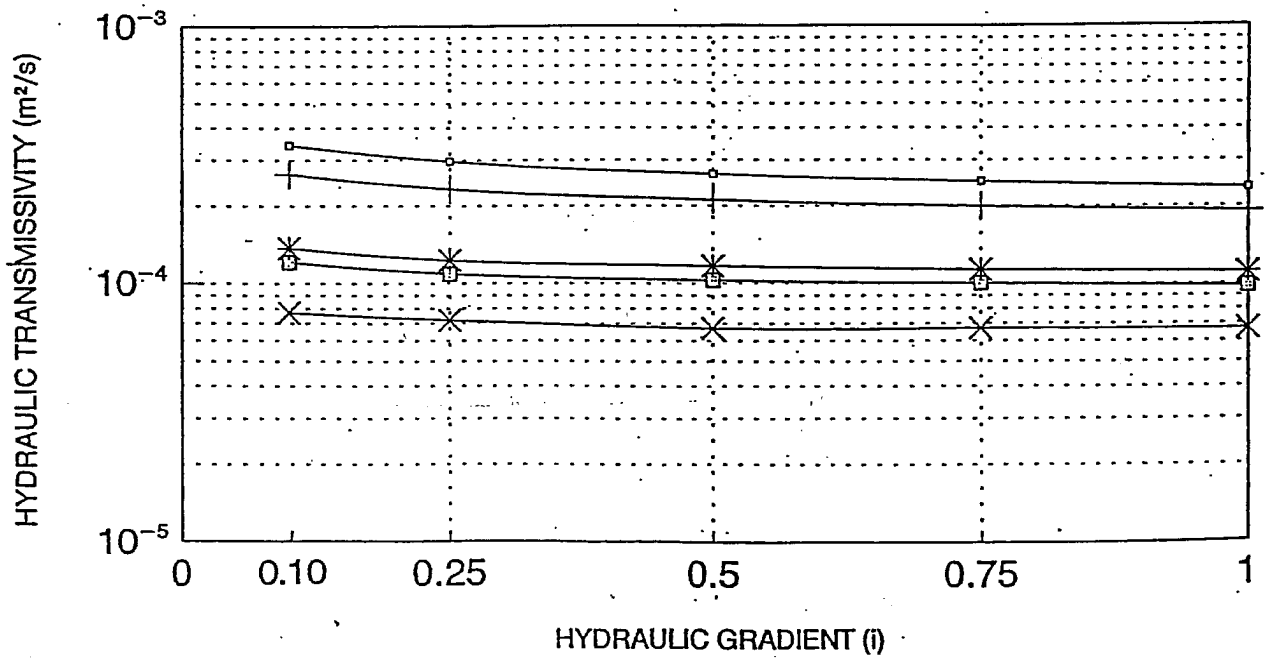

REP 4/5

ADS SPECIFIER MANUAL

ADVANCED DRAINAGE SYSTEMS, INC.

ADVANCED DRAINAGE SYSTEMS, IN

TABLE 7

CIRCULAR PIPE FLOW CAPACITY
Full Flow (cubic feet per second)

Mannings "n"= 0.015

Dia. (in.)	*Conv. Factor	% Slope (feet per 100 feet) 0.02	0.05	0.10	0.20	0.35	0.50	0.75	1.00	1.25	1.50	1.75	2.0	2.5	5.0	10.0	20.0
									(c.f.s.)								
3	0.766	0.011	0.017	0.024	0.034	0.045	0.054	0.066	0.077	0.086	0.09	0.10	0.11	0.12	0.17	0.24	0.34
4	1.649	0.023	0.037	0.052	0.074	0.098	0.117	0.143	0.165	0.184	0.20	0.22	0.23	0.26	0.37	0.52	0.74
5	2.991	0.042	0.067	0.095	0.134	0.177	0.211	0.259	0.299	0.334	0.37	0.40	0.42	0.47	0.67	0.95	1.34
6	4.863	0.069	0.109	0.154	0.217	0.288	0.344	0.421	0.486	0.544	0.60	0.64	0.69	0.77	1.09	1.54	2.17
8	10.473	0.148	0.234	0.331	0.468	0.620	0.741	0.907	1.047	1.171	1.28	1.39	1.48	1.66	2.34	3.31	4.68
10	18.99	0.27	0.42	0.60	0.85	1.12	1.34	1.64	1.90	2.12	2.33	2.51	2.69	3.00	4.25	6.00	8.49
12	30.88	0.44	0.69	0.98	1.38	1.83	2.18	2.67	3.09	3.45	3.78	4.08	4.37	4.88	6.90	9.76	13.81
15	55.98	0.79	1.25	1.77	2.50	3.31	3.96	4.85	5.60	6.26	6.86	7.41	7.92	8.85	12.52	17.70	25.04
18	91.04	1.29	2.04	2.88	4.07	5.39	6.44	7.88	9.10	10.18	11.15	12.04	12.87	14.39	20.36	28.79	40.71
21	137.32	1.94	3.07	4.34	6.14	8.12	9.71	11.89	13.73	15.35	16.82	18.17	19.42	21.71	30.71	43.43	61.41
24	196.06	2.77	4.38	6.20	8.77	11.60	13.86	16.98	19.61	21.92	24.01	25.94	27.73	31.00	43.84	62.00	87.68
27	268.41	3.80	6.00	8.49	12.00	15.88	18.98	23.24	26.84	30.01	32.87	35.51	37.96	42.44	60.0	84.9	120.0
30	355.48	5.03	7.95	11.24	15.90	21.03	25.14	30.79	35.55	39.74	43.54	47.03	50.27	56.21	79.5	112.4	159.0
36	578.05	8.17	12.93	18.28	25.85	34.20	40.87	50.06	57.81	64.63	70.80	76.47	81.75	91.40	129.3	182.8	258.5
42	872.0	12.33	19.50	27.57	38.99	51.6	61.7	75.5	87.2	97.5	106.8	115.3	123.3	137.9	195.0	275.7	389.9
48	1244.9	17.61	27.84	39.37	55.67	73.6	88.0	107.8	124.5	139.2	152.5	164.7	176.1	196.8	278.4	393.7	556.7

* Conveyance Factor = (1.486 x R2/3 x A) / n

DET 44
5

REF 5B

ADVANCED DRAINAGE SYSTEMS, INC.
"FACT SHEET"
STANDARD PIPE PERFORATIONS
3-24" I.D. SINGLE WALL PIPE

Nominal I.D.	Perforation Type	Slot Length or Diameter (Max.)	Slot Width (Max.)	Nominal Water Inlet Area (Sq. In./Ft.)	Perforation Configuration
3	Slot	1.25	0.125	1.44	AF
4	Slot	1.25	0.125	2.01	AH
5	Slot	1.57	0.125	2.01	AH
6	Slot	1.88	0.125	2.01	AH
8	Slot	2.50	0.125	1.57	AD
10	Slot	2.50	0.125	1.26	AD
12	Slot	2.50	0.125	3.38	H
15	Slot	2.50	0.125	1.58	H
18	Circular	0.375	—	1.58	H
24	Circular	0.375	—	1.58	11" Centers

PERFORATION CONFIGURATIONS

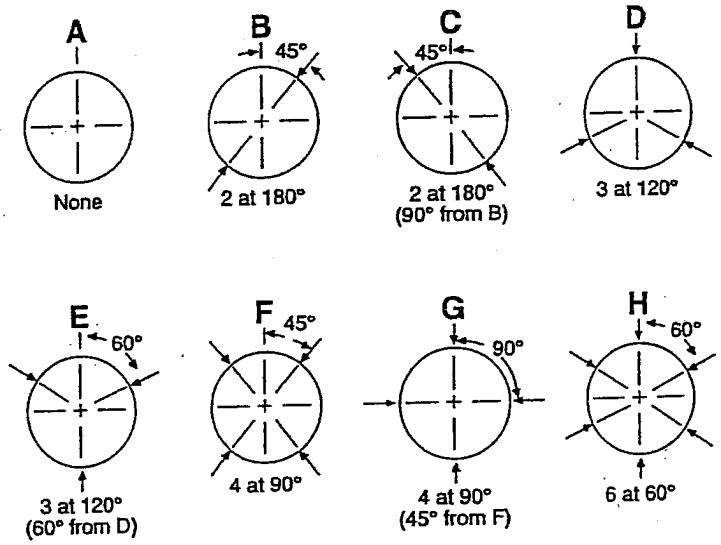

NOTE 1
ADS pipe is perforated for water entry with slots or circular perforations. The perforations are uniformly spaced along the length and circumference of the pipe.

NOTE 2
Unless otherwise specified, ADS pipe is manufactured to comply with the perforation requirements specified in the following industry standards: ASTM F405, ASTM F667, AASHTO M252, AASHTO M294, and SCS Code 606.

Issued: March 15, 1991

REF 8
4

DAVIS' HANDBOOK OF APPLIED HYDRAULICS

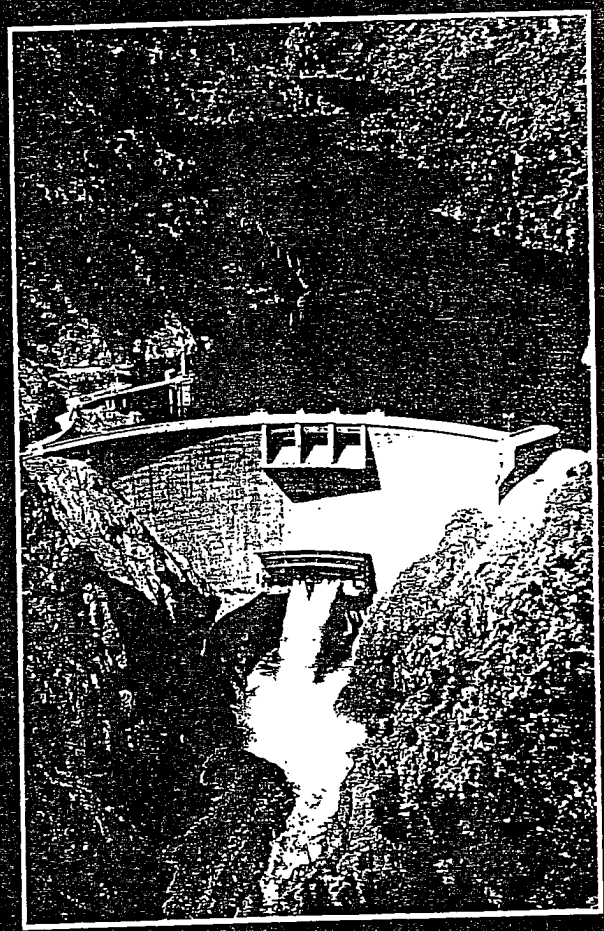

FOURTH EDITION

Vincent J. Zipparro
Hans Hasen

C 8-30

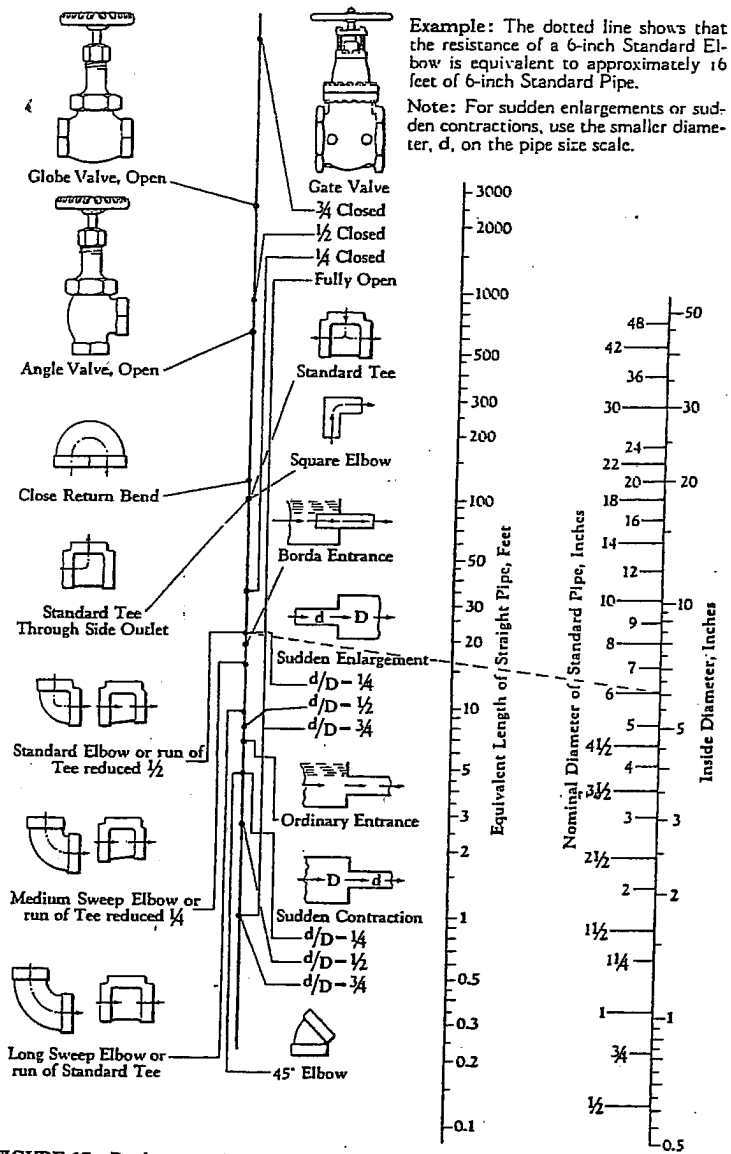

FIGURE 17 Resistance of valves and fittings to flow of fluid.

ORIFICES

25. High Head. When the head is relatively large, as compared with the size of the orifice, the following equation will apply:

$$Q = CA\sqrt{2gH} \tag{37}$$

REF 7

TO: Stan Christie
ESI 714-727-7399
FROM: Mark Patton
PAGES: 5

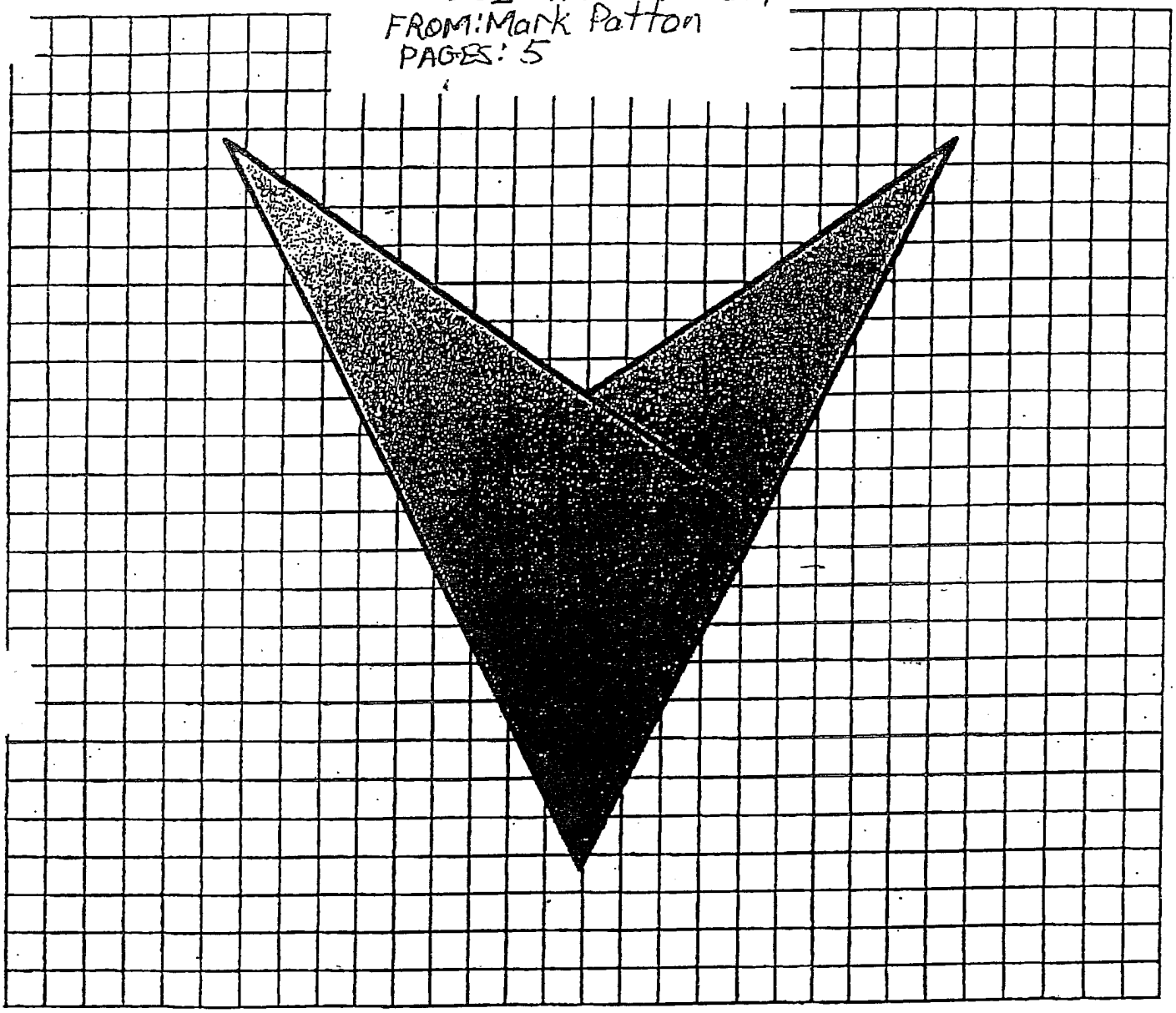

PROTEC®
RECIP® PUMP

GROUNDWATER & LEACHATE RECOVERY PUMPS

Stan Christie
714-727-7399
For your file
Mark Patton

PROTEC

ENVIRONMENTAL EQUIPMENT

A COMPLETE LINE OF GROUNDWATER REMEDIATION LANDFILL LEACHATE & SAMPLING PUMPS

GUARDIAN	RECIP	AUTOPILOT	ROTARY
Variable Speed Electric Submersible Pump	Electric or Air Driven Piston Pump	Automatic "Controllerless" Air Pump	Electric Drive Progressing Cavity Pump

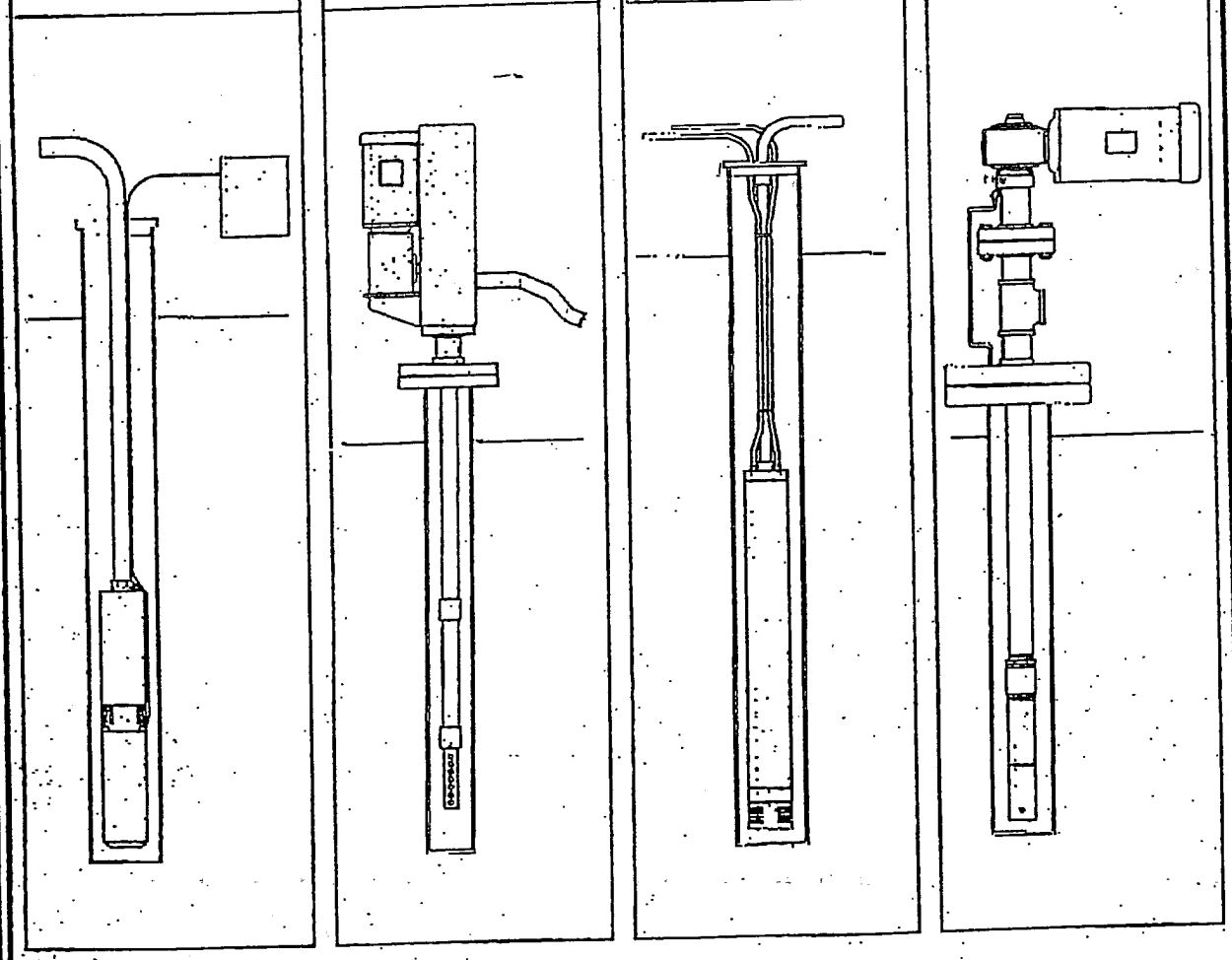

PROTEC

HOUSTON, TX

SALES: 918-493-6101

TULSA, OK

PROTEC RECIP PUMP CURVES

MODEL RP1
(1.90" O.D. 34" LONG)

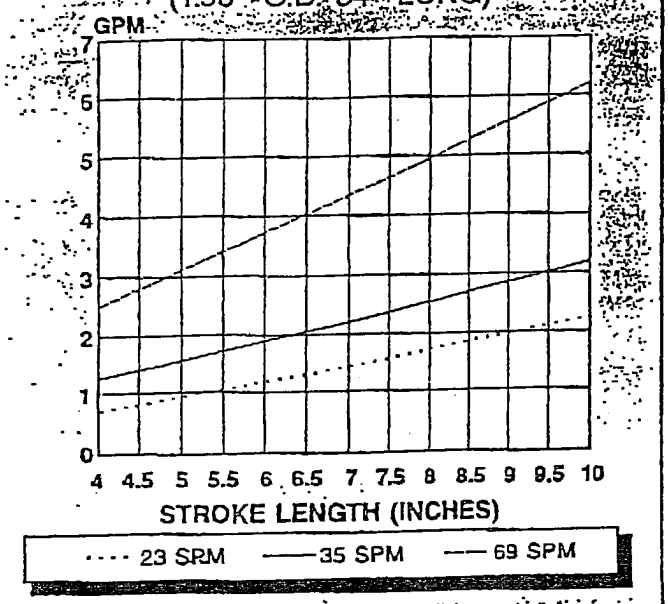

MAXIMUM SETTING DEPTH 200 FT.
1140 RPM MTR = 23 SPM, 1750 RPM MTR = 35 SPM
3450 RPM MTR = 69 SPM, APPROX. 1 HP

MODEL RP2
(2.375" O.D. 34" LONG)

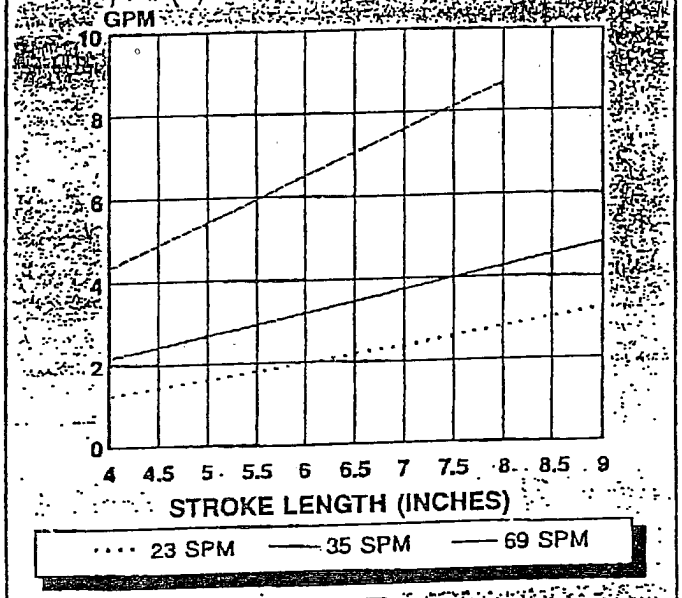

MAXIMUM SETTING DEPTH 200 FT.
1140 RPM MTR = 23 SPM, 1750 RPM MTR = 35 SPM
3450 RPM MTR = 69 SPM, APPROX. 1.5 HP

MODEL RP3
(2.875" O.D. 34" LONG)

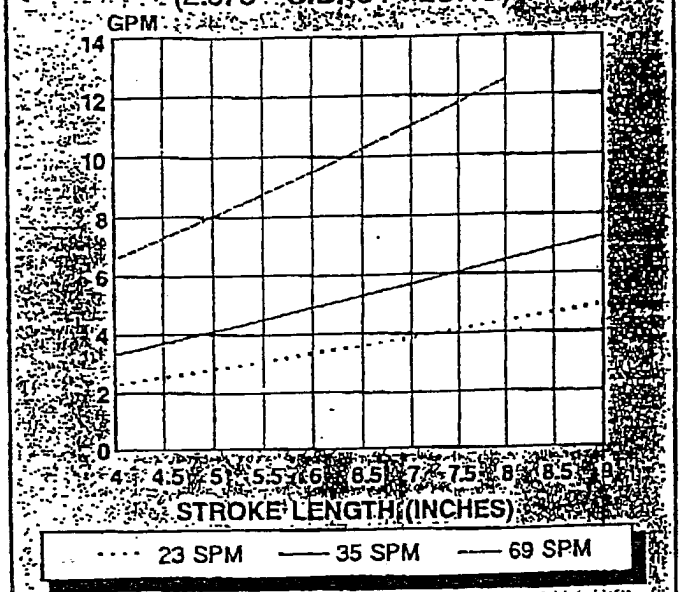

MAXIMUM SETTING DEPTH 200 FT.
1140 RPM MTR = 23 SPM, 1750 RPM MTR = 35 SPM
3450 RPM MTR = 69 SPM, APPROX. 2 HP

MODEL RP5
(4.5" O.D. 34" LONG)

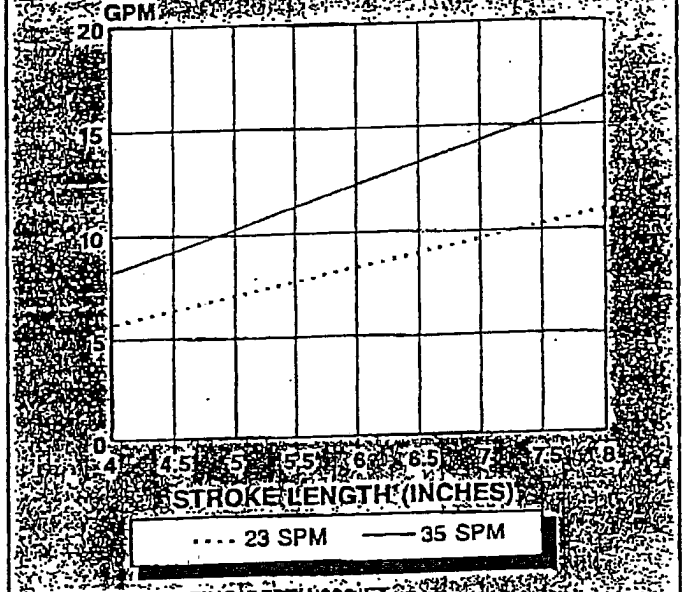

MAXIMUM SETTING DEPTH 200 FT.
1140 RPM MTR = 23 SPM
1750 RPM MTR = 35 SPM, APPROX. 3 HP

PROTEC
7136 S. Yale, Suite 200 • Tulsa, OK 74136 • 918-493-6101

ELECTRIC DRIVE

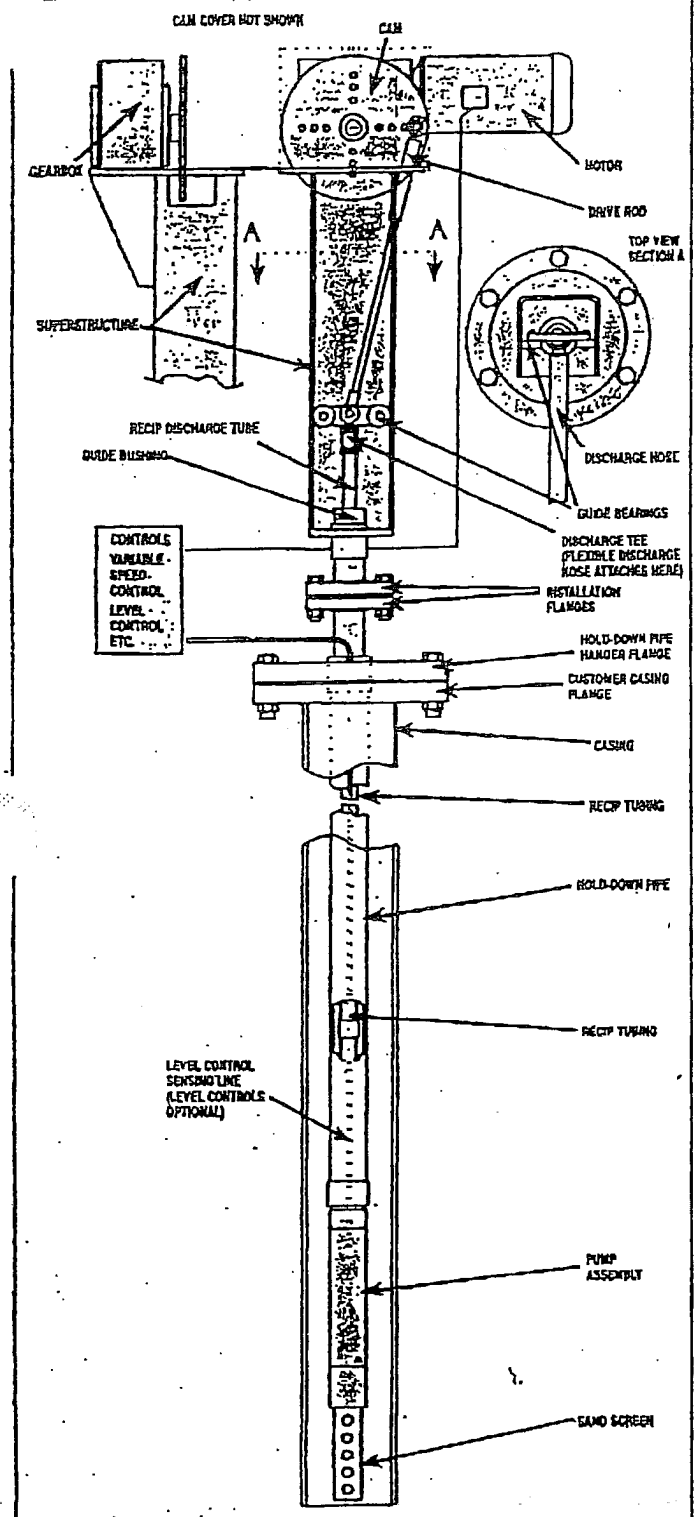

SURFACE DRIVE ASSY. APPROX. DIMENSIONS
ELECTRIC DRIVE: 55" H x 24" W x 12" D
AIR DRIVE: 51" H x 8" W x 8" D
LOW PROFILE DRIVES ALSO AVAILABLE WHEN THERE ARE HEIGHT LIMITATIONS

AIR DRIVE

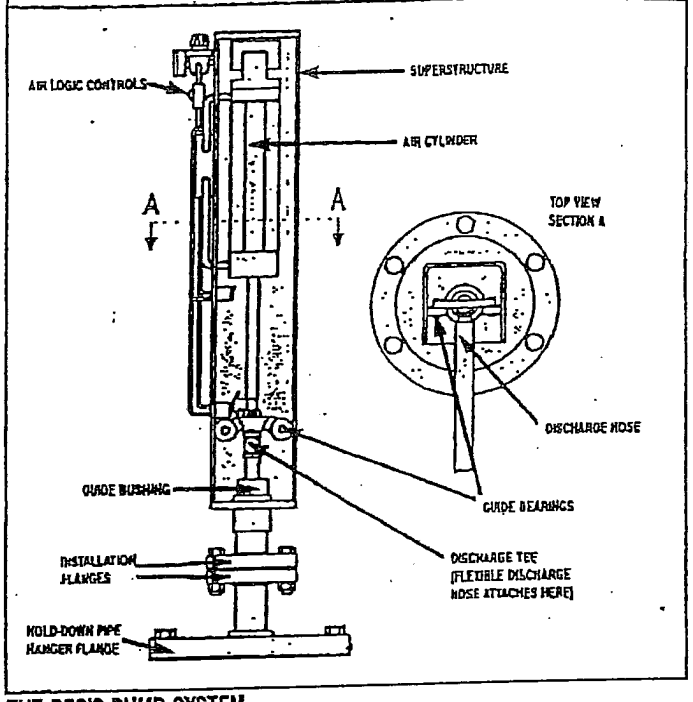

THE RECIP PUMP SYSTEM

The **RECIP PUMP** is a surface driven (air drive or electric drive) down-hole reciprocating pump. The down-hole pump assembly is anchored by a string of stationary pipe (Hold-Down Pipe). The pump piston is attached to the bottom of a string of reciprocating tubing (Recip Tubing) which is run inside the Hold-Down Pipe. The surface drive assembly alternately lifts and lowers the Recip Tubing which gives the down-hole pump its reciprocating motion. The surface drive assembly can be either Air Drive or Electric Drive. The Air Drive unit utilizes a dual acting air cylinder. The Electric Drive unit utilizes an electric motor (TEFC or X-Proof) coupled to a gearbox and cam assembly.

The **RECIP PUMP** is a positive displacement piston pump with pumping rate (GPM) directly proportional to strokes per minute (SPM) and stroke length (SL). On the Electric Drive unit SL is adjusted manually by changing the position of the drive rod connection to the cam and SPM depends on the motor RPM selected (1140, 1750 or 3450 RPM). An optional electronic VSD (Variable Speed Drive) is also available to give variable SPM capability to the Electric Drive unit. The Air Drive unit comes standard as a variable speed device since the pump speed (SPM) can be controlled by the pressure regulator on the drive unit. The Recip Pump is currently available in four sizes: RP1, RP2, RP3 and RP5. Pump rates range from fractional GPM to 16 GPM.

Down-hole pump materials of construction are stainless steel and Teflon for service in highly corrosive fluids. **RECIP PUMP** can run dry without causing damage to the pump. Pump operation is easily interfaced with down-hole level controls, tank level controls, safety shut-downs, timers, etc. to meet the operating requirements of any particular site.

APPLICATIONS

The **RECIP PUMP** is an efficient low-maintenance system for installation in extraction wells and trench sumps associated with groundwater recovery and leachate collection projects. **RECIP PUMP** is also useful as a dedicated sampling pump for groundwater monitoring.

Notice that the Model RP1 can pump up to 6 GPM from wells with 2" casing. This means that often existing monitoring wells can be utilized for continuous recovery when a project advances from the sampling stage to the remedial pump and treat stage. And when new recovery wells must be drilled it is less expensive to drill and equip 2" wells than larger diameter wells.

IN SUMMARY

High volumetric pump efficiency and low power requirements make the **RECIP PUMP** a highly efficient pumping system. Simple design, rugged construction and low operating speeds result in long operating life and low maintenance. Other features are: low noise, small size, quick installation and all moving parts fully enclosed.

PUMP SELECTION TABLE

PUMP MODEL	RP1	RP2	RP3	RP5
PUMP OUTSIDE DIAMETER	1.90 IN.	2.375 IN.	2.875 IN.	4.50 IN.
STANDARD MOTOR HP[1]	1.0 HP	1.5 HP	2.0 HP	3.0 HP
PUMP SETTING DEPTH	1 - 200 FT.	1 - 200 FT.	1 - 200 FT.	1 - 200 FT.
GPM RANGE				
1. FIXED SPEED ELECTRIC ADJUSTABLE SL[2]				
DEPENDS ON MOTOR RPM:				
WITH 1140 RPM MOTOR[3]	0.8-2.1 GPM	1.4-3.2 GPM	2.2-4.9 GPM	5-10 GPM
WITH 1750 RPM MOTOR	1.2-3.1 GPM	2.1-4.8 GPM	3.2-7.3 GPM	8-16 GPM
WITH 3450 RPM MOTOR	2.5-6.2 GPM	4.2-8.5 GPM	6.5-13.0 GPM	N/A
2. VARIABLE SPEED ELECTRIC ADJUSTABLE SL & SPM[4]				
USE ELECTRIC VSD[5]	0.1-6.2 GPM	1.4-8.5 GPM	2.2-13.0 GPM	5-16 GPM
3. VARIABLE SPEED AIR ADJUSTABLE SPM	0.1-6.2 GPM	1.4-8.5 GPM	2.2-13.0 GPM	5-16 GPM

[1] Motor HP can vary depending on operating conditions.
[2] SL: Strokes Length.
[3] 1140 RPM motors available in 3-Phase only.
[4] SPM: Strokes Per Minute.
[5] VSD: Variable Speed Drive.

NOTE: Above data is in accordance with the pump curves on the back cover.

PUMPS **ELECTRIC DRIVE** **AIR DRIVE**

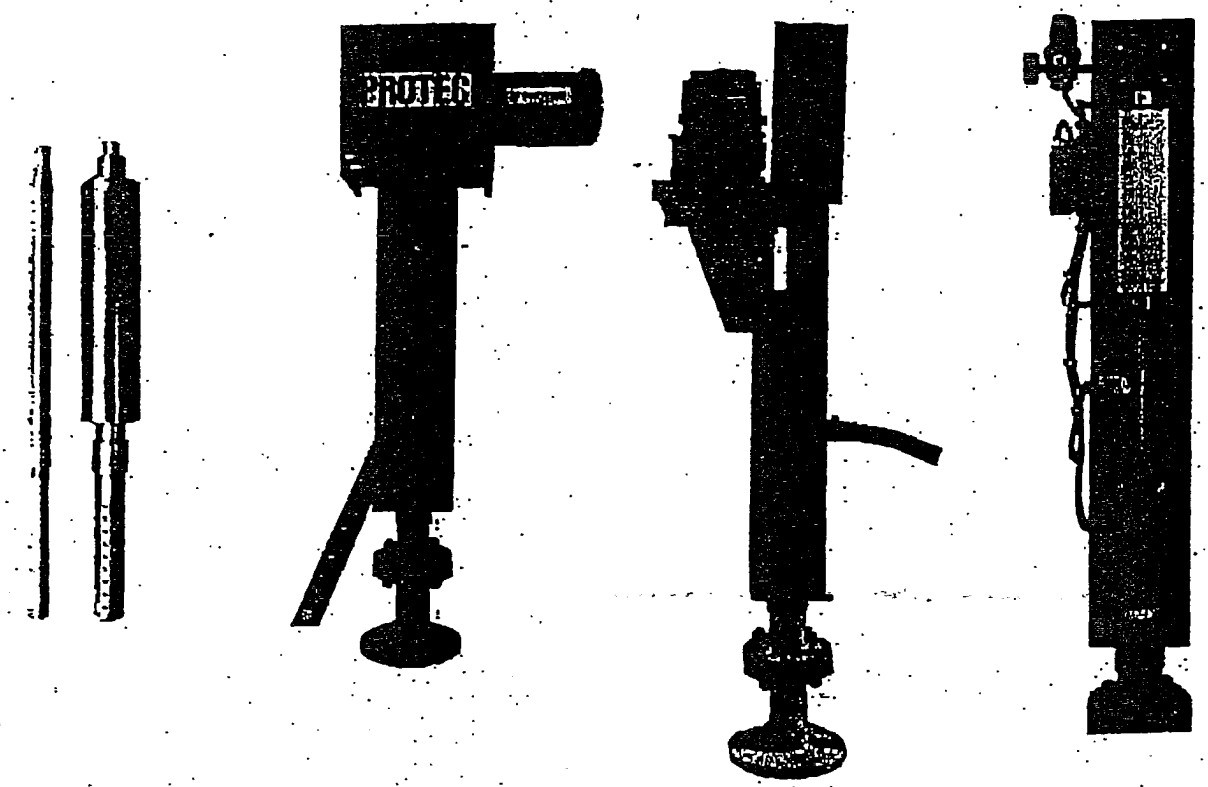

PROTEC RECIP PUMP
PRICE LIST
(FOR ESTIMATING PURPOSES)
November 1994

The following are estimated prices for complete pumping units including down-hole pump, surface drive assembly and 4 feet of cross-linked polyethylene discharge hose. On Electric Drive units for variable SPM (Strokes Per Minute) add VSD (Variable Speed Drive). Air Drive price includes pneumatic controls and Air Drive units are inherently variable SPM.

PUMP MODEL	AIR DRIVE 316 SS	FIXED SPM TEFC MOTOR	FIXED SPM X-PROOF MOTOR	VSD ADD-ON NEMA 3R PANEL FOR USE WITH TEFC DC MOTOR	VSD ADD-ON NEMA 3R PANEL FOR USE WITH TEFC OR X-PROOF AC MOTOR
RP1	2,700.00 3100	2,975.00	3,175.00	875.00	1,075.00
RP2	2,900.00 3100	3,175.00	3,425.00	1,025.00	1,175.00
RP3	3,100.00	3,375.00	3,625.00	N/A	1,275.00
RP5	3,700.00	3,975.00	4,225.00	N/A	1,325.00

ACCESSORIES

LEVEL CONTROL:
Dual Probe Level Control.....286.00
Dual Float Level Control.....305.00
Level Control Signal Wire.....0.50/FT
(22 Gauge, Teflon Jacketed)
Pneumatic Level Control.....275.00
Pneumatic L/C Tube (3/8" Teflon).....2.50/FT
Stroke Counter.....100.00
Pneumatic Dual Timer.....275.00

WELL TUBULARS

1. FOR USE IN 2" CASING (RP1 ONLY):
RECIP TUBING : 1/2" CS T&C.....1.23/FT
1/2" 304SS T&C.....5.22/FT*
HOLD-DOWN PIPE: 1" CS T&C.....1.81/FT
1" 304 SS T&C.....8.36/FT*

2. FOR USE IN 3" AND LARGER CASING (RP5 6" AND LARGER CASING):
RECIP TUBING (RP1, 2, 3) : 3/4" CS T&C.....1.55/FT
3/4" 304 SS T&C.....6.62/FT* ← Add 25 % for 316 S.S.
(RP5 ONLY): 1" CS T&C.....1.81/FT
1" 304 SS T&C.....8.36/FT* ←
HOLD-DOWN PIPE (RP1, 2, 3): 1 1/4" CS T&C.....2.43/FT
1 1/4" 304 SS T&C.....10.53/FT* ←
(RP5 ONLY): 2" CS T&C.....2.96/FT
2" 304 SS T&C.....13.86/FT* ←

*SS PRICES CAN FLUCTUATE SIGNIFICANTLY OVER TIME.

WELL HEAD FITTINGS: Standard Carbon Steel.....150.00
Stainless Steel.....price on request

TOP LOADING INLET JACKET (PUMP CAN): Carbon steel.....150.00

CONTROL PANELS - NEMA 3R Enclosure (Contactor, Adjustable Thermal Overload, HOA. Does not include primary disconnect or short circuit protection.)

FIXED SPM: THRU 10 HP, 1-PHASE OR 3-PHASE.....250.00
FOR VARIABLE SPM: PANEL PRICE INCLUDED IN VSD PRICE ABOVE. CONTROL PANELS CAN ALSO BE CUSTOM BUILT PER CUSTOMER REQUIREMENTS.

HOUSTON, TX SALES: 918-493-6101 TULSA, OK

REF 8

CRC

STANDARD MATHEMATICAL TABLES

28th EDITION

CRC PRESS

C 8-38

REF 8A

Mensuration Formulas

Pyramid

S of regular pyramid $= \frac{1}{2}$(perimeter of base) $\times$ (slant height)

$V = \frac{1}{3}$(area of base) $\times$ (altitude)

Frustum of Pyramid

Let B_1 = area of lower base, B_2 = area of upper base, h = altitude.

S of regular figure $= \frac{1}{2}$(sum of perimeters of bases) $\times$ (slant height)

$V = \frac{1}{3}h(B_1 + B_2 + \sqrt{B_1B_2})$

Prismatoid

A *prismatoid* is a polyhedron having for bases two polygons in parallel planes, and for lateral faces triangles or trapezoids with one side lying in one base, and the opposite vertex or side lying in the other base, of the polyhedron. Let B_1 = area of lower base, M = area of midsection, B_2 = area of upper base, h = altitude.

$$V = \frac{1}{6}h(B_1 + 4M + B_2) \quad \text{(the } \textit{prismoidal formula}\text{)}$$

Note: Since cubes, rectangular parallelepipeds, prisms, pyramids, and frustums of pyramids are all examples of prismatoids, the formula for the volume of a prismatoid subsumes most of the above volume formulae.

Regular Polyhedra

Let v = number of vertices, e = number of edges, f = number of faces, α = each dihedral angle, a = length of each edge, r = radius of the inscribed sphere, R = radius of the circumscribed sphere, A = area of each face, T = total area, V = volume.

$v - e + f = 2$ (the *Euler-Descartes formula*—actually holds for *any* convex polyhedron)

$$T = fA$$
$$V = \frac{1}{3}rfA = \frac{1}{3}rT$$

Name	Nature of Surface	T	V
Tetrahedron	4 equilateral triangles	$1.73205a^2$	$0.11785a^3$
Hexahedron (cube)	6 squares	$6.00000a^2$	$1.00000a^3$
Octahedron	8 equilateral triangles	$3.46410a^2$	$0.47140a^3$
Dodecahedron	12 regular pentagons	$20.64573a^2$	$7.66312a^3$
Icosahedron	20 equilateral triangles	$8.66025a^2$	$2.18169a^3$

Name	v	e	f	α	a	r
Tetrahedron	4	6	4	70° 32′	$1.633R$	$0.333R$
Hexahedron	8	12	6	90°	$1.155R$	$0.577R$
Octahedron	6	12	8	109° 28′	$1.414R$	$0.577R$
Dodecahedron	20	30	12	116° 34′	$0.714R$	$0.795R$
Icosahedron	12	30	20	138° 11′	$1.051R$	$0.795R$

LCRS FLOW CAPACITY AND PUMP SIZING

AquAeTer

optimizing environmental resources - water; air; earth

CALCULATION SUMMARY SHEET

PROJECT NUMBER: 073113

PROJECT NAME: USEN – Trench 12 Design, Supplemental Calculations

DATE: August 16, 2007

CALCULATION NUMBER: C.8 Revision: Update per 2007 Design

CALCULATION TITLE: LCRS Flow Capacity and Pump Sizing

DESCRIPTION OF CALCULATION:

Calculation to determine if 1996 LCRS Flow Capacity and Pump Sizing are sufficient for 2007 proposed design

REFERENCES USED: Number of Reference Pages Attached:

1. August 6, 2007 Calculation of Infiltration Rates
2. GSE Geotextile Information
3. EPG Sump Pump Information
4. Previous calc: 1996 calculation titled "LCRS Flow Capacity and Pump Sizing"
5. Designing with Geosynthetics, Koerner, 1998.
6. USEPA. Solid Waste Disposal Facility Criteria – (EPA530-R-93-017), dated Noveber 1993

REVIEW COMMENTS:

CALCULATION MADE BY: CAB DATE: 8/22/2007

CALCULATION CHECKED BY: SLW DATE: 8/23/2007

CALCULATION REVISED BY: DATE:

CALCULATION REVIEWED BY: SLW DATE: 8/23/2007

Purpose of Calculation

Use the 1996 LCRS flow capacity and pump sizing calculation to determine if proposed changes in the 2007 trench design require changes to the LCRS or associated piping and pumps. The purpose of the LCRS is to ensure that the head on the primary liner does not exceed one foot.

Method

The flow to sumps will be calculated.

The sump flow elements will be sized to handle the flow.

A pump capable of evacuating the flow from the sumps will be specified.

Analysis

A 2-inch design storm occurring immediately following placement of the 30-inch operations layer and before placement of any additional waste, is the design criteria for the LCRS drainage system. As shown in the LCRS Infiltration Calcuation, the resulting infiltration into the LCRS drainage net is dependent on unsaturated flow conditions and result in the following flow.

Cell	Infiltration (gal/min/cell)
12A	7.9
12B	5.4 ***
12C	8.6

(Reference LCRS Infiltration Rate Calculation, August 6, 2007)

The geocomposite transmissivity is 4.35 gal/min/ft. See reference for GSE FabriNet Geocomposite (Double-Sided) – 8 oz/yd^2 at 300 mil. The relationship of transmissivity and flow is proven with d'Arcy's Law.

d'Aarcy Flow = q_{ult} =kiA

Where k = hydraulic conductivity
i = gradient
A = area

Transmissivity = T = b*k where b is the thickness of the geocomposite.

Rearranging the transmissivity equation so $k = \frac{T}{b}$

For a unit width of geocomposite:

A = 1 x b, therefore A = b

then $q_{ult} = \frac{T}{b} * i * b = T*i$

Substituting the transmissivity (4.35 gal/min-ft) and the minimum bottom gradient of Trench 12 of 0.01:

q_{ult} = 4.35 gal/min-ft * 0.01 = 0.0435 gal/min-ft.

Effective flow for the geosynthetic is calculated by applying several safety factors to the ultimate flow rate. The following from Koerner 1998 is used for that calculation. Definitions are provided in the attached reference.

$$q_{eff} = \frac{q_{ult}}{(RF_{IN} \times RF_{CR} \times RF_{CC} \times RF_{BC})}$$

The following table shows the unit flow capacity for the geosynthetic LCRS member based on the applicable transmissivity, hydraulic gradient, and safety factors:

Flow Element	q_{ult}	RF_{IN}	RF_{CR}	RF_{CC}	RF_{BC}	q_{eff}	q_{eff}
Units	gal/min-ft	NA	NA	NA	NA	gal/min/ft	gal/day/ft
GSE Fabrinet 8 ounce/yd^2	0.0435	1.5	1.4	1.5	1.5	0.00921	13.3

Using the effective flow through the geocomposite to determine permeability yields the following:

$$k = \frac{q_{eff}}{Ai}, \text{ for unit width (1 ft) where A = b, } k = \frac{q_{eff}}{bi}$$

Permeablility = q_{eff} / geocomposite thickness / gradient

$$\text{Permeability} = 0.00921 \frac{gallons}{min-ft} \times \frac{0.134\,ft^3}{1\,gallon} \times \frac{1}{0.3\,inch} \times \frac{12\,inch}{1\,foot} \times \frac{1}{0.01} = 4.94\,ft/min$$

For cell 12C to accommodate q_{eff} into the LCRS, the geonet must have a minimum perimeter of (8.6 gallons/minute)/(0.00921 gal/min/ft) = 930 feet. Providing this much flow capacity with geocomposites alone is not feasible; therefore, a pipe system will be provided to improve drainage characteristics into the LCRS sumps.

A single 3-inch diameter corrugated polyethylene pipe (Manning n = 0.015) at a slope of 1 percent has a flow capacity of approximately 34 gallons per minute (1996 Calculation C.8). This is more than sufficient to accommodate the maximum LCRS flow into the sump. As shown in Figure 1, the pipes will be located along the grade breaks of the bottom with lateral lines located every 100 feet along the grade break length. The basis for the layout is described below.

As shown in the 1996 LCRS flow calculation, from manufacturer's literature 3 inch diameter corrugated polyethylene pipe comes with slots providing 1.44 in^2 of flow area per foot of piple. The orifice equation is used to estimate flow into the pipe per foot of length. The orifice equation is as follows (Reference in 1996 Calculation):

$$Q = CA\sqrt{2gH}$$

The coefficient C = 0.6, g = 32.2 ft/sec^2, and H is assumed to be 1. The calculation is therefore:

$$Q = (0.6)(1.44in^2)\left(\frac{1ft^2}{144in^2}\right)\sqrt{2\left(\frac{32.2ft}{sec^2}\right)(1in)\left(\frac{1ft}{12in}\right)}$$

$$Q = \frac{0.014ft^3}{sec}\left(\frac{7.48gal}{ft^3}\right)\left(\frac{60sec}{min}\right) = 6.2gpm$$

Since this is substantially more than the maximum estimated flow rate, the spacing of laterals is controlled by the flow capacity of the geocomposite. The geocomposite flow capacity of 0.00921 gal/min/ft is used to verify the spacing of piping laterals. Water infiltration into the geocomposite was calculated in a separate calculation. The various rates for the three cells are shown in table below and in the attached reference. Lateral spacing is then calculated as:

L = Infiltration/Flow in Geotextile or for Cell 12C,

$$L = \left(0.00921\frac{gal}{min-ft}\right)\left(\frac{min-ft2}{9.2x10^{-5}gal}\right)$$

L = 100 ft

Cell	Floor Area (ft^2)	Infiltration (gal/min/ft^2)	Flow in geocomposite gal/min-ft	Lateral Spacing (ft)
12A	149,149	5.31E-05	0.00921	173
12B	122,425	4.43E-05	0.00921	208
12C	93,409	9.23E-05	0.00921	100

The length between the laterals is not less than the 100 feet; therefore, the 1996 design criteria of 100 feet is sufficient and will be used.

The peak leachate head on the primary liner system will occur after the minimum initial thickness of waste (30 inches of select waste as protective cover) has been placed over the cell. According to the USEN permit regulation, head on the liner can not exceed 1 foot. The maximum depth of leachate above the primary liner system is described in the USEPA document

Solid Waste Disposal Facility Criteria – *Technical Manual* (EPA530-R-93-017), dated Noveber 1993 as:

$$h_{max} = \frac{L\sqrt{c}}{2}\left[\frac{\tan^2\alpha}{c} + 1 - \frac{\tan\alpha}{c}\sqrt{\tan^2\alpha + c}\right]$$

Where c = amount of leachate (q/k)
k = permeability of geocomposite (from above)
q = vertical inflow rate (reference attached)
α = slope (1 percent or 0.57°)
L = distance between the piping laterals (100 feet)

Using the above equation, a maximum flow length of 100 feet (maximum distance between laterals), a rate of vertical inflow (infiltration rate from the Trench 12 Infiltration Rate Calculation (August 6, 2007)), the permeability (4.9 ft/min), and a bottom slope of 1 percent (or 0.57°) were applied.

The results for the three cells of Trench 12 are shown below.

Cell	L Farthest Length ft	q Rate of Vertical Inflow ft/min	k Permeability ft/min	α Slope (°)	c c=q/k (unitless)	$\tan^2\alpha$	h_{max} Max Height (ft)	h_{max} Max Height (in)
12A	100	7.10E-06	4.93	0.57	1.44E-06	9.89767E-05	0.030	0.36
12B	100	5.93E-06	4.93	0.57	1.20E-06	9.89767E-05	0.027	0.33
12C	100	1.23E-05	4.93	0.57	2.50E-06	9.89767E-05	0.040	0.48

The results of the calculation show that leachate head on the liner should not exceed the permit limit of 1.0 foot.

Pump Size

The LCRS pump must be capable of lifting the leachate vertically approximately 100 feet. As described in the 1996 calculation, head losses in the discharge line are expected to be minimal, allow for 5 feet of loss. Also minor losses are anticipated to be no more than 20 percent of the subtotaled loss, or approximately 21 feet. Total estimated dynamic head (TDH) is therefore:

TDH = 100 ft + 5 ft + 21 ft = 126 feet.

As done in the 1996 calculation, using a safety factor of 4 for the required pump capacity should be 4 x 8.6 gallons per minute or 34.4 gallons per minute. An EPG Vertical Sump Drainer Model 12-5 at 3.0 HP provides this capacity. Reference is attached.

Results

The effective flow of the LCRS geocomposite is 0.00921 gal/ft-min. Since infiltration could be as high as 8.6 gallons per minute, a sump with a perimeter of 930 feet would be needed to prevent backups from occurring. Since the sump has a perimeter of only 70 feet, backups could occur; therefore, 3" piping spaced at 100 feet will be used in the LCRS design. Maximum leachate head on the liner could be as much as 0.013 feet in cell 12C; however, this is less than the 1.0 foot maximum required in the permit therefore 100 feet lateral drainage piping and the selected geocomposite are acceptable.

Since flow through the LCRS system could be as high as 8.6 gallons per minute and assuming a safety factor or 4, an EPG Vertical Sump Drainer Model 12-5 at 3.0 HP was selected as the pump for the LCRS.

REFERENCE

INFILTRATION RATE - 2007 CALCULATION

SHEET OF RATES

$$Q = Ku * i * A$$

$$Q = (7.10 \times 10\text{-}6 \text{ ft / min})(1.0)(1.0 \text{ sq ft})$$

$$= 7.10 \times 10\text{-}6 \text{ cu ft / min per square foot area}$$

$$= 5.31 \times 10\text{-}5 \text{ gal/ min per square foot area}$$

Drainage over the entire 3.42 acre area of the Phase 1 floor is:

$$Q = (5.31 \text{ gal} \times 10\text{-}5 \text{ gal / sq ft – min}) \text{ X } 3.42 \text{ acre X } 43{,}560 \text{ sq ft / acre}$$

$$Q = 7.9 \text{ gallons per minute}$$

The calculation was repeated for cells 12B and 12C. The results of the analyses are provided in the attached table.

Calculation result

When the 2.5-feet thick select waste layer, before placement of any additional waste, is subject to the 2-inch design storm, the resulting infiltration into the LCRS drainage net is dependent on unsaturated flow conditions and result in the following flow.

Cell	Infiltration (gal/min/cell)
12A	7.9
12B	5.4
12C	8.6

INFILTRATION RATE CALCULATION

Infiltration Into the LCRS

Cell	Floor (ft2)	Sidewalls (ft2)	Design Storm (in)	Design Storm Precip to Floor (in)	Vol Water Content After Storm %	Ku (cm/sec)	Ku (ft/min)	q ($ft^3/min/ft^2$)	q ($gal/min/ft^2$)	q (gal/min/cell)
12A	149,149	44,492	2	2.60	0.309	3.61E-06	7.10E-06	7.10E-06	5.31E-05	7.9
12B	122,425	28,055	2	2.46	0.304	3.01E-06	5.93E-06	5.93E-06	4.43E-05	5.4
12C	93,409	48,410	2	3.04	0.323	6.27E-06	1.23E-05	1.23E-05	9.23E-05	8.6

Variables

		k (cm/sec)	Porosity %	FC %	WP %	Ψb	λ	θr	i	A (ft^2)
Soil Type	SM	5.20E-04	0.473	0.222	0.104	0.013	0.27	0.04	1	1

REFERENCE

2007 DESIGN AREAS

BASE COORDINATE ASSUMED
N 10,000 E 10,000
FOUND 1" IRON PIPE NO TAG
NW COR. NE 1/4, NW 1/4
SEC. 35, T 13 S, R 47 E, M.D.M.

EXISTING ROAD

20' BUFFER

SUMP LAYOUT SEE DETAIL

12A

Floor = 149,149 FT²
Sidewalls = 44,492 FT²

12B

Floor = 122,428 FT²
Sidewalls = 28,055 FT²

12C

Floor = 93,409 FT²
Sidewalls = 48,410 FT²

TRENCH 1
TRENCH 2
TRENCH 3
TRENCH 4
TRENCH 5

LIMIT OF LOW LEVEL RADIOACTIVE WASTE (LLRW) TRENCHES

BASE OF SLOPE (TRENCH COVER)

TOP OF SLOPE (TRENCH EXCAVATION)

NOTES:

1. CONTOURS SHOWN ARE TOP OF PREPARED SUBGRADE. SINCE GEOSYNTHETICS ARE USED EXCLUSIVELY FOR LINING, IT IS EFFECTIVELY ALSO THE TOP OF LINER. SEE DETAIL 2 ON SHEET 08 FOR LCRS PIPE DEPLOYMENT AND DETAIL 1 ON DRAWING 008 FOR LDS DRAINAGE LAYER DEPLOYMENT.
2. THE HORIZONTAL CONTROL LINE (HCL) IS ESTABLISHED BY THE OFFSET BUFFERS. THE HCL IS THE LIMIT OF EXCAVATION EXCLUDING EXCAVATION REQUIRED TO REPLACE LOOSE SURFACE SOIL AT TRENCH EDGES.
3. ALL SUBGRADE EXCAVATION SIDE SLOPES ARE 0.5:1 (HORIZONTAL:VERTICAL), EXCEPT AT CURVED SECTIONS WHERE A CONSTANT RADIUS IS MAINTAINED FROM THE TOP OF SLOPE (i.e., THE HCL).
4. THE MINIMUM BOTTOM SLOPE, TOWARDS THE SUMPS IS 1% OR 2% AS INDICATED.
5. PROVIDE LOCAL GRADING AS NECESSARY TO PROVIDE DRAINAGE AWAY FROM THE HCL.
6. DURING FILLING OF TRENCH 12, PROVIDE A BERM ALONG THE TRENCH 12 TOP OF SLOPE TO PREVENT RUN-ON ONTO THE TRENCH.

Figure 1

LEGEND

- EXISTING DRAINAGE DITCH AND DIRECTION OF FLOW
- PROPERTY LINE
- FENCE LINE
- HORIZONTAL CONTROL LINE (LIMIT OF EXCAVATION)
- PERMIT LINE (RADIOLOGICAL WASTE DISPOSAL AREA)
- UNIMPROVED ROAD
- 1' CONTOUR INTERVAL, FEET (MSL)
- 5' CONTOUR INTERVAL, FEET (MSL)
- 10' CONTOUR INTERVAL, FEET (MSL)
- SUMP AREA
- TRENCH 1 — LOW LEVEL RADIOLOGICAL WASTE TRENCH

SURVEY CONTROL TABLE

PI/CURVE	PI COORDINATES		CURVE DATA RADIUS	LENGTH	TANGENT	DELTA
A	N 9,930.00	E 10,020.00	60.00'	94.25'	60.00'	90°00'00"
B	N 9,544.08	E 10,020.00	60.00'	95.10'	60.85'	90°46'56"
C	N 9,554.07	E 10,721.31	60.00'	51.70'	27.55'	49°22'10"
D	N 9,621.79	E 10,777.76	60.00'	12.02'	6.03'	11°28'50"
E	N 9,688.23	E 10,833.18	60.00'	13.35'	6.69'	12°57'10"
F	N 9,762.93	E 11,007.26	60.00'	54.97'	29.38'	52°19'50"
G	N 9,589.77	E 11,356.15	60.00'	124.83'	102.26'	119°12'14"
H	N 9,930.00	E 11,337.00	60.00'	97.31'	97.13'	93°31'26"

GROUND CONTROL BY:
GREAT WEST SURVEYORS
LAS VEGAS, NEVADA

PHOTOGRAMMETRY BY:
C & C AERIAL MAPPING CORP.
SAN DIMAS, CALIFORNIA

BASED ON DRAWING NV-151-EMT-003 BY:
ENVIRONMENTAL SOLUTIONS, INC.
IRVINE, CALIFORNIA

50 25 0 50
SCALE FEET

DESCRIPTION	DRWN BY	DSGN BY	CHKD BY	APP'D BY	DATE

USEcology Nevada
an American Ecology company

PROJECT NUMBER: 073113 DATE: 5/17/07

BEATTY NEVADA
HAZARDOUS WASTE MANAGEMENT FACILITY

EXCAVATION PLAN

DRWN BY	DATE	DSGN BY	DATE	CHKD BY	DATE	APP'D BY	SCALE	JOB NO.	DRAWING NO.	REV.
LAM	5/17/07	CAB	5/17/07	SLW	5/17/07	SLW		073113	NV12-07-004	---

Lateral Spacing

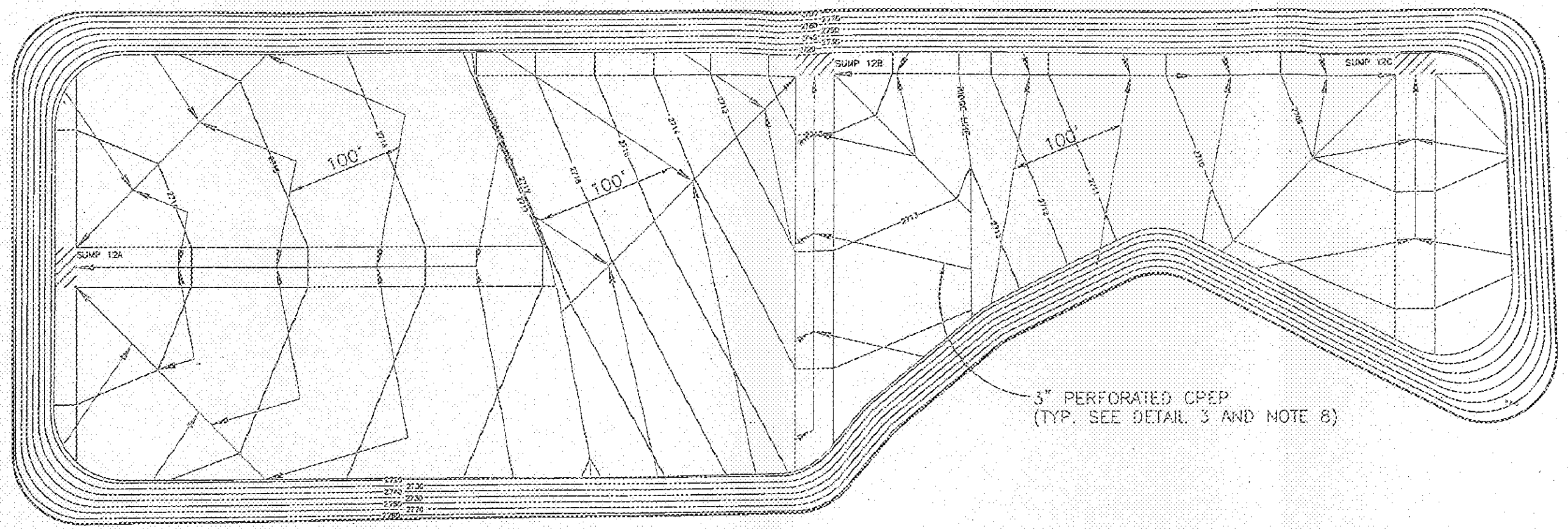

2 DEPLOYMENT LCRS PIPES

REF.: NV12-07-004

100 50 0 100

SCALE FEET

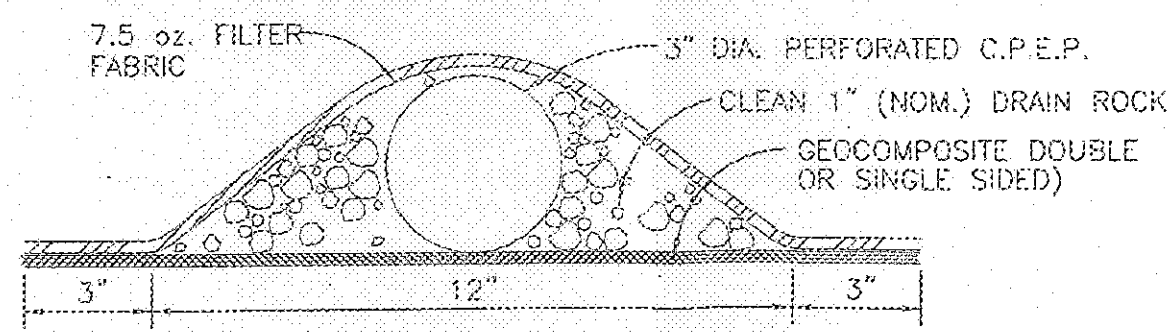

3 TYPICAL C.P.E.P SECTION

REF.: NV12-07-008

Figure 2