REFERENCE

KOERNER 1998

Fourth Edition

Designing with Geosynthetics

Robert M. Koerner, Ph.D., P.E.

H. L. Bowman Professor of Civil Engineering,
Drexel University and Director, Geosynthetic
Research Institute

PRENTICE HALL
Upper Saddle River, New Jersey 07458

TABLE 8.4 ESTIMATES OF REQUIRED FLOW RATES (DISCHARGE) FOR WICK DRAINS

Source	Required Flow Rate* (l/min)	Normal Stress (kPa)	Hydraulic Gradient
den Hoedt [31]	0.17	—	—
Kremer et al. [32]	0.30	100	0.62
Kremer et al. [32]	0.09†	—	—
Kremer et al. [33]	1.51	15	1.00
Holtz et al. [34]	0.23	400	—
Koerner et al. [35]	0.10	in situ	1.00
Rixner et al. [28]	0.19	in situ	1.00
Holtz and Christopher [36]	0.95	in situ	1.00
Bergado et al. [37]	0.76	in situ	1.00
	0.47†	in situ	1.00

*Note, in the literature many authors use the unit of m^3/yr for the required rate. 1.0 l/min = 526 m^3/yr

†In flattened S-configuration, i.e., in deformed state.

RF_{BC} = reduction factor for biological clogging of the geotextile or within the drainage core space.

A guide for typical values in Eq. (8.10) is presented as Table 8.5 (compare this with Table 4.2 for geonets). Note, however, that wick drains are temporary construction expedients, thus the chemical and biological clogging potential is probably quite low. Creep is dependent on the time the strip drains are required and the normal stress arising from the depth within the soil to be consolidated. For intrusion RF_{IN}, ASTM D4716 can be evaluated with soil above and below the wick drains. In this case, the intrusion reduction factor would be included as a value of unity. Now, having an in situ modified value of q_{allow}, a traditional design-by-function can be performed. See Example 8.4.

TABLE 8.5 RECOMMENDED REDUCTION FACTORS FOR EQ. (8.10) TO DETERMINE ALLOWABLE FLOW RATE OF DRAINAGE GEOCOMPOSITES (WICK DRAINS, SHEET DRAINS AND EDGE DRAINS)

Application Area	RF_{IN}	RF_{CR}^{*}	RF_{CC}	RF_{BC}
Sport fields	1.0 to 1.2	1.0 to 1.2	1.0 to 1.2	1.1 to 1.3
Capillary breaks	1.1 to 1.3	1.0 to 1.2	1.1 to 1.5	1.1 to 1.3
Roof and plaza decks	1.2 to 1.4	1.0 to 1.2	1.0 to 1.2	1.1 to 1.3
Retaining walls, seeping rock and soil slopes	1.3 to 1.5	1.2 to 1.4	1.1 to 1.5	1.0 to 1.5
Drainage blankets	1.3 to 1.5	1.2 to 1.4	1.0 to 1.2	1.0 to 1.2
Surface water drains for landfill caps	1.3 to 1.5	1.2 to 1.4	1.0 to 1.2	1.2 to 1.5
Secondary leachate collection (landfill)	1.5 to 2.0	1.4 to 2.0	1.5 to 2.0	1.5 to 2.0
Primary leachate collection (landfill)	1.5 to 2.0	1.4 to 2.0	1.5 to 2.0	1.5 to 10
Wick drains†	1.5 to 2.5	1.0 to 2.5	1.0 to 1.2	1.0 to 1.2
Highway edge drains	1.2 to 1.8	1.5 to 3.0	1.1 to 5.0	1.0 to 1.2

*These values assume that the ultimate value was obtained using an applied normal pressure of approximately 1.5 times the field anticipated maximum value. If not, the values must be increased.

†An additional term for kinking should be included, where RF_{KG} = 1.0 to 4.0.

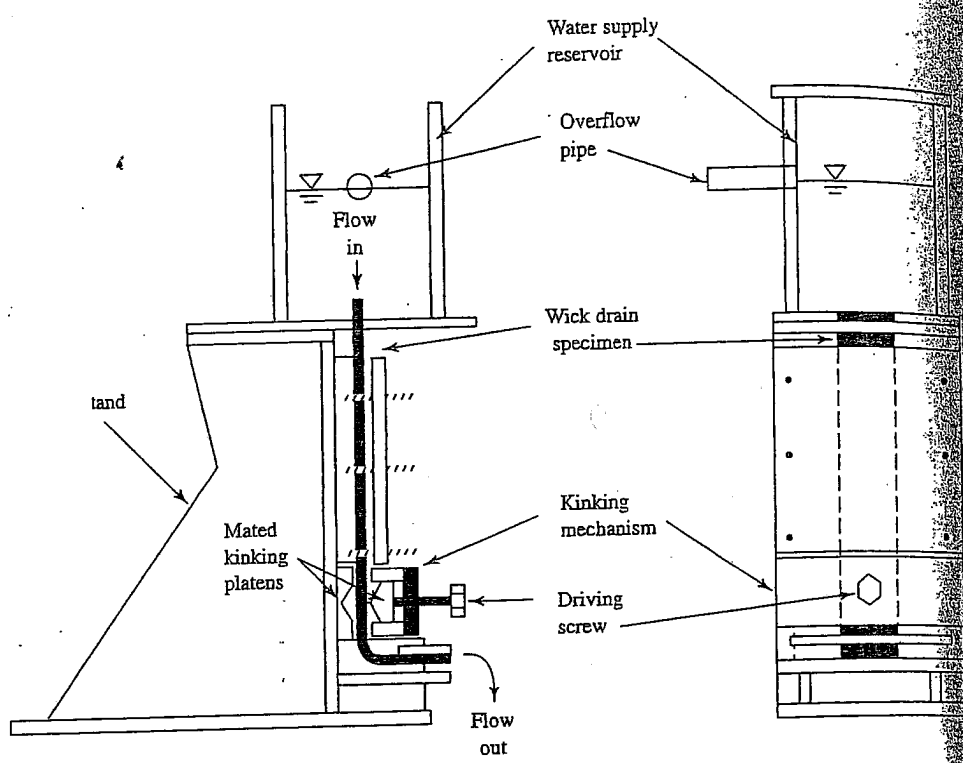

Figure 8.12 Side and front views of laboratory kinking test device.

For the allowable flow rate q_{allow} the ultimate flow rate from a ASTM D4716 test method should be obtained (recall Section 4.1.3). Typical values of ultimate flow rate at a hydraulic gradient of 1.0 under 200 kPa normal stress vary from 2.5 to 5.0 l/min for a 100 mm wide wick drain. This value must then be reduced on the basis of site specific reduction factors,

$$q_{allow} = q_{ult}\left[\frac{1}{RF_{IN} \times RF_{CR} \times RF_{CC} \times RF_{BC}}\right] \tag{8.10}$$

where

q_{allow} = allowable flow rate to be used in design,
q_{ult} = ultimate flow rate (as determined from ASTM D4716) for short-term tests,
RF_{IN} = reduction factor for elastic deformation of the adjacent geotextile intruding into the drainage core space,
RF_{CR} = reduction factor for creep deformation of the drainage core itself and/or intrusion of the adjacent geotextile into the drainage core space,
RF_{CC} = reduction factor for chemical clogging and/or precipitation of chemicals onto the geotextile or within the drainage core space, and

LDS FLOW CAPACITY AND PUMP SIZING

AquAeTer

optimizing environmental resources - water; air; earth

CALCULATION SUMMARY SHEET

PROJECT NUMBER: 073113

PROJECT NAME: USEN – Trench 12 Design, Supplemental Calculations

DATE: August 21, 2007

CALCULATION NUMBER: _____ Revision: Update per 2007 Design

CALCULATION TITLE: LDS Flow Capacity

DESCRIPTION OF CALCULATION:

Calculation to determine LDS Flow Capacity and Pump Sizing

REFERENCES USED: Number of Reference Pages Attached: _____

1. GSE Geotextile Information
2. EPG Sump Pump Information
3. Previous calc: 1996 calculation titled "LDS Flow Capacity (ALR) and Pump Sizing"
4. Designing with Geosynthetics, Koerner, 1998.

REVIEW COMMENTS:

CALCULATION MADE BY: CAB DATE: 8/22/2007

CALCULATION CHECKED BY: SLW DATE: 8/22/2007

CALCULATION REVISED BY: _____ DATE: _____

CALCULATION REVIEWED BY: SLW DATE: 9/27/07

Purpose of Calculation

Use the 1996 LDS flow capacity and pump sizing calculation to determine if proposed changes in the 2007 trench design require changes to the LDS or associated piping and pumps.

Method

The flow to sumps will be calculated.

The sump flow elements will be sized to handle the flow.

Calculate action leakage rate (ALR) for cell 12 sumps

A pump capable of evacuating the flow from the sumps will be specified.

Analysis

Applicable Regulations

As provided in the 1996 LDS Calculation, the regulatory definition of the ALR is the maximum design flow rate the LDS can convey without the fluid head on the secondary composite liner exceeding one foot.

Geometry

The typical bottom liner is shown below.

Figure 1. Typical Trench Bottom Configuration

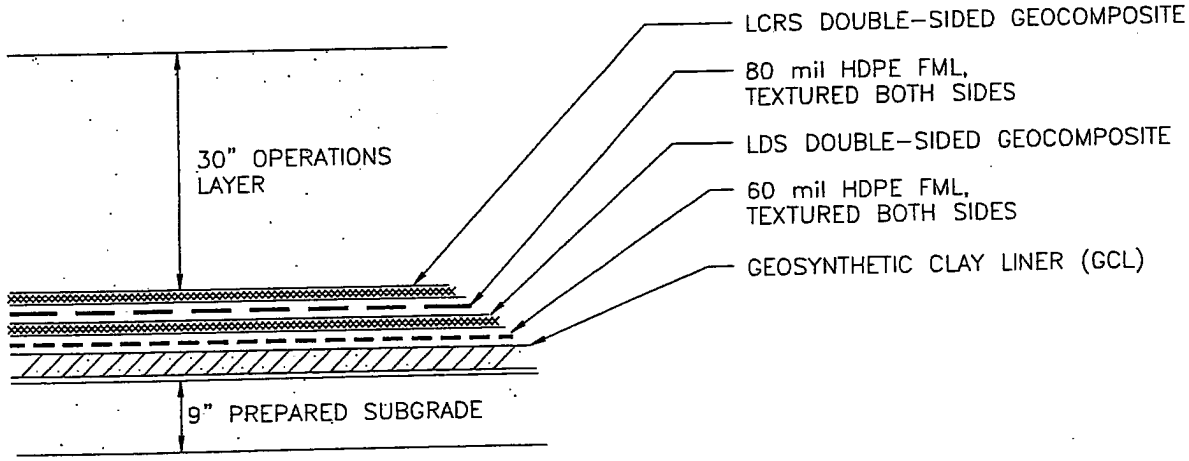

There are three sumps in the Trench 12 design. The typical geometry is shown below.

Figure 2. Typical Sump Layout

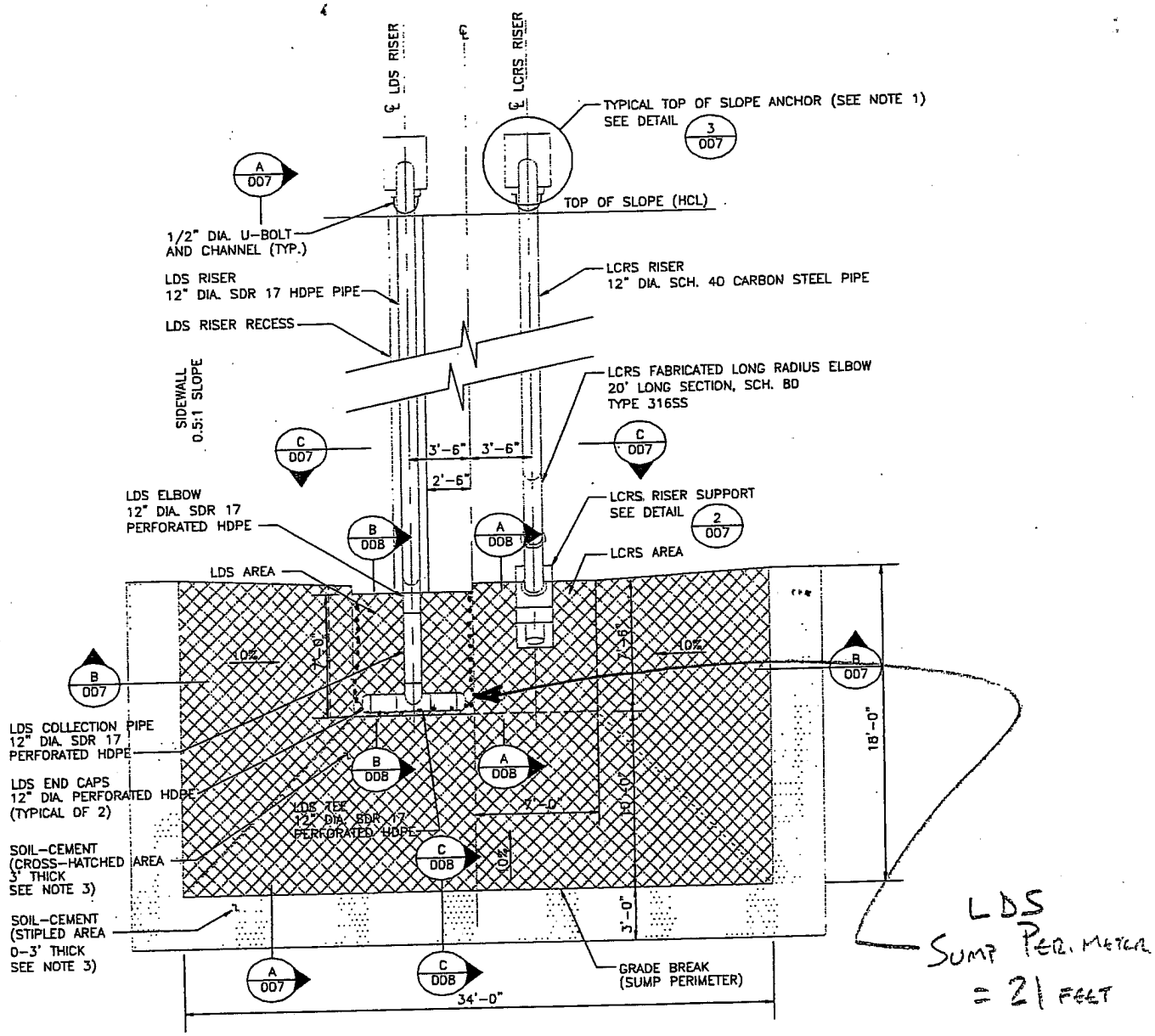

Flow Capacities

The following flow elements will be used in the LDS.

- Double sided geocomposite (GSE Fabrinet 8 ounce/yd^2).

- Gravel (clean, poorly graded, nominal ¾" diameter) used in the sump only.

The double sided geocomposite is used in the slope liner LDS as well as in the bottom liner as shown in Figure 1. A continuous strip of geocomposite will be used for each system. Therefore, flow within in the LDS will be controlled by the minimum bottom slope.

Flow within the Geocomposite is calculated using Darcy's Equation (which assumes laminar flow within the net). The reference for the formula below is included in the attached 1996 calculation references.

$$q = \Theta_{eff} * i$$

Where

q = flow per unit width

Θ_{eff} = effective transmissivity

i = hydraulic gradient

Flow within the gravel also uses Darcy's formula, however, transmissivity is replaced with hydraulic conductivity and the thickness of the flow area.

Effective transmissivity for the geocomposite is calculated by applying several safety factors to the published transmissivity value. The following formula is used for that calculation. Definitions are provided in the references of the attached 1996 calculation.

$$\Theta_{eff} = \frac{\Theta}{(FS_{CR} \times FS_{IN} \times FS_{CC} \times FS_{BC})}$$

The following table shows the unit flow capacity for the geocomposite and the gravel based on the applicable transmissivity, or hydraulic conductivities, hydraulic gradients, and safety factors. Also, the flow through a drainage net was considered in the event that flow through the geocomposite was not sufficient.

Flow Element	Θ	FS_{CR}	FS_{IN}	FS_{CC}	FS_{BC}	Θ_{eff}	i	q	q
Units	gal/min/ft	NA	NA	NA	NA	gal/min/ft	NA	gal/min/ft	gal/day/ft
GSE Fabrinet UF 8 ounce/yd^2	4.35	1.4	1.5	1.5	1.5	0.92	**0.01**	0.0092	13
GSE HyperNet UF	38.64	1.4	1.5	1.5	1.5	8.18	**0.01**	0.0818	118
GSE Fabrinet UF 8 ounce/yd^2	4.35	1.4	1.5	1.5	1.5	0.92	**0.1**	0.0921	133
GSE HyperNet UF	38.64	1.4	1.5	1.5	1.5	8.18	**0.1**	0.8178	1178

Transmissivity values are provided by the manufacturer as included in the references. Safety factors are taken from the literature (Koerner 1998). Flow capacities are shown at hydraulic gradients of 1 percent and 10 percent for the nominal cell bottom slope and

the minimum sump slope, respectively. Since the gravel is used only within the sump boundaries around the riser pipes, flow capacities are calculated for the geocomposite only.

Controlling Section

As shown in the typical sump layout figure, there are two potentially controlling sections: 1) the 7'x 7' LDS perimeter at 15" thick; and 2) the perimeter at the grade break between the 1 and 10 percent slopes

Using EPA guidelines, the sumps will be designed for a maximum ALR of 200 gallons per acre per day (gpad). Total area contributing to each sump (including floor and sidewalls) and total flow for each cell are shown in the table below and are calculated as Total Area*ALR = Total Flow.

Sump	Total Area (acres)	ALR (gpad)	Total Flow (ALR) (gpd)
12A	4.45	200	890
12B	3.45	200	690
12C	3.26	200	652

Since the maximum flow to the sump is only about 0.6 gpm (Sump 12A ALR), the EPG Vertical Sump Drainer, Model No. 12-5 (with a pumping capacity of 50 gpm at 125 feet) or equivalent provides more than adequate capacity. It is anticipated that liquid will be allowed to accumulate in the LDS until sufficient volume is present to remove efficiently with a pump. At no time however, would more than 12 inches of fluid be allowed to collect over the liner system.

Each sump has a perimeter of 70 feet at the grade break between 1 percent and 10 percent slope. The following table shows the minimum length (i.e., perimeter required to accommodate the total flow for each sump using the various flow elements. Since gravel is not used outside of the sumps, perimeters are calculated for only the geocomposite.

Total Flow (ALR) / Flow Capacity through Geocomposite (GSE Fabrinet UF at a slope of 0.01) as calculated in the table above = Length of Geocomposite required at its discharge point into the sump (i.e., the exterior perimeter of the sump). The calculated perimeter length must be less than 70 to prevent leachate backups.

Sump	Total Flow (ALR) (gpd)	Flow Capacity Through GSE Fabrinet UF at i = 0.01 (gpd/ft)	Perimeter Length Flow at i = 0.01 (ft)
12A	890	13	68
12B	690	13	53
12C	652	13	50

At the 1 percent to 10 percent perimeter grade break, single geocomposite layers are adequate for the 70 feet long perimeter of all sumps without the need for additional drainage net thickness (or higher capacity) to increase flow.

Instead of calculating the needed sump perimeter, the following table calculates the design flow into each sump using the 1996 and 2007 sump design (of 70 feet) and compares it to the required ALR.

(Sump Perimeter (ft)) * (Flow Capacity through Geocomposite (gpd/ft)) / (Total Area (acre)) = (Design Flow (gal/acre/day))

Design Flow must exceed Required ALR to prevent backups on the liner.

Sump	Total Flow - ALR (gpd)	Total Area (acres)	Sump Perimeter at i = 0.01 (ft)	Flow Capacity Through GSE Fabrinet UF at i = 0.01 (gpd/ft)	Design Flow (gal/acre/day)	Required ALR (gal/acre/day)
12A	890	4.45	70	13	204	200
12B	690	3.45	70	13	264	200
12C	652	3.26	70	13	279	200

Within the 7'x7' area immediately surrounding the LDS intake, the perimeter is 21 feet as shown in the typical sump layout figure. As shown in the table below, a single geocomposite layer has sufficient flow capacity to accommodate the design ALR without the need for additional drainage net to increase flow.

Total Flow (ALR) / Flow Capacity through Geocomposite (GSE Fabrinet UF at a slope of 0.1) as calculated in the table above = Length of Geocomposite required at its discharge point into the sump (i.e., the discharge point to gravel). The calculated perimeter length must be less than 21 to prevent leachate backups.

Sump	Total Flow - ALR (gpd)	Flow Capacity Through GSE Fabrinet UF at i = 0.1 (gpd/ft)	Perimeter Length Flow at i = 0.1 (ft)
12A	890	133	6.7
12B	690	133	5.2
12C	652	133	4.9

Result

Flow through the GSE Fabrinet UF (or equivalent) at 1 percent up to the perimeter of the sump (at the grade break) provides sufficient flow to meet the ALR requirements for all three sumps. Flow through the GSE Fabrinet UF at 10 percent gradient up to the

perimeter of the 7' x 7' area around the LDS pipe and pump is sufficient and does not result in accumulation of water on the LDS liner. Therefore a single layer of double sided geocomposite (GSE Fabrinet UF 8 ounce/yd^2) is sufficient for the ALR requirements of the LDS and the second and third layers used in the 1996 design are not necessary.

REFERENCE

GSE SPECIFICATION

GSE STANDARD PRODUCTS

Product Data Sheet

GSE FabriNet UF Geocomposite (Double-Sided)

GSE FabriNet UF geocomposite consists of GSE HyperNet UF geonet heat-laminated on both sides with a GSE nonwoven needlepunched geotextile. GSE HyperNet UF is a 300 mil thick geonet manufactured from a premium grade high density polyethylene resin. For the purpose of lamination to geonets, GSE nonwoven needlepunched geotextiles are available in mass per unit area range of 6 oz/yd² (200 g/m²) to 16 oz/yd² (540 g/m²). GSE FabriNet UF geocomposites are designed and formulated to perform drainage function under a range of anticipated site loads, gradients and boundary conditions. Index properties for the product are provided in the table below. Please contact GSE for further information regarding performance under site-specific conditions.

Product Specifications

TESTED PROPERTY	TEST METHOD	FREQUENCY	MINIMUM AVERAGE ROLL VALUE[a]		
			6 oz/yd²	8 oz/yd²	10 oz/yd²
Geocomposite					
Product Code			F82060060T	F82080080T	F82100100T
Transmissivity[b], gal/min/ft (m²/sec)	ASTM D 4716	1/540,000 ft²	4.35 (9.0 x 10^{-4})	4.35 (9.0 x 10^{-4})	4.35 (9.0 x 10^{-4})
Ply Adhesion, lb/in (g/cm)	ASTM D 7005	1/50,000 ft²	1.0 (178)	1.0 (178)	1.0 (178)
Roll Width[c], ft (m)			15.0 (4.5)	15.0 (4.5)	15.0 (4.5)
Roll Length[c], ft (m)			160 (48)	150 (45)	140 (42)
Roll Area, ft² (m²)			2,400 (223)	2,250 (209)	2,100 (195)
Geonet core[d]					
Transmissivity[b], gal/min/ft (m²/sec)	ASTM D 4716		38.64 (8 x 10^{-3})	38.64 (8 x 10^{-3})	38.64 (8 x 10^{-3})
Thickness, mil (mm)	ASTM D 5199	1/50,000 ft²	300 (7.6)	300 (7.6)	300 (7.6)
Density, g/cm³	ASTM D 1505	1/50,000 ft²	0.94	0.94	0.94
Tensile Strength (MD), lb/in (N/mm)	ASTM D 5035	1/50,000 ft²	75 (13.3)	75 (13.3)	75 (13.3)
Carbon Black Content, %	ASTM D 1603	1/50,000 ft²	2.0	2.0	2.0
Geotextile (prior to lamination)[d,e]					
Mass per Unit Area, oz/yd² (g/m²)	ASTM D 5261	1/90,000 ft²	6 (200)	8 (270)	10 (335)
Grab Tensile, lb (N)	ASTM D 4632	1/90,000 ft²	170 (755)	220 (975)	260 (1,155)
Puncture Strength, lb (N)	ASTM D 4833	1/90,000 ft²	90 (395)	120 (525)	165 (725)
AOS, US Sieve (mm)	ASTM D 4751	1/540,000 ft²	70 (0.212)	80 (0.180)	100 (0.150)
Permittivity, (sec⁻¹)	ASTM D 4491	1/540,000 ft²	1.5	1.5	1.2
Flow Rate, gpm/ft² (l/min/m²)	ASTM D 4491	1/540,000 ft²	110 (4,480)	110 (4,480)	85 (3,460)
UV Resistance, % Retained	ASTM D 4355 (after 500 hours)	once per formulation	70	70	70

NOTES:

- [a]These are MARV values and are based on the cumulative results of specimens tested by GSE. AOS in mm is a maximum average roll value.
- [b]Gradient of 0.1, normal load of 10,000 psf, water at 70° F (20° C), between stainless steel plates for 15 minutes.
- [c]Roll widths and lengths have a tolerance of ±1%.
- [d]Component properties prior to lamination.
- [e]Refer to geotextile product data sheet for additional specifications.

DS066 FabriNetUF R03/07/06

This information is provided for reference purposes only and is not intended as a warranty or guarantee. GSE assumes no liability in connection with the use of this information. Please check with GSE for current, standard minimum quality assurance procedures and specifications.

GSE and other trademarks in this document are registered trademarks of GSE Lining Technology, Inc. in the United States and certain foreign countries.

North America	GSE Lining Technology, Inc.	Houston, Texas	800 435 2008	281 443 8564	Fax: 281 230 8650
South America	GSE Lining Technology Chile S.A.	Santiago, Chile		56 2 595 4200	Fax: 56 2 595 4290
Asia Pacific	GSE Lining Technology Company Limited	Bangkok, Thailand		66 2 937 0091	Fax: 66 2 937 0097
Europe & Africa	GSE Lining Technology GmbH	Hamburg, Germany		49 40 767420	Fax: 49 40 7674234
Middle East	GSE Lining Technology-Egypt	The 6th of October City, Egypt		202 2 828 8888	Fax: 202 2 828 8889

GSE®

GSE STANDARD PRODUCTS

Product Data Sheet

GSE HyperNet, HF, HS and UF Geonet

GSE HyperNet geonets are synthetic drainage materials manufactured from a premium grade high density polyethylene (HDPE) resin. The structure of the HyperNet geonet is formed specifically to transmit fluids uniformly under a variety of field conditions. HDPE resins are inert to chemicals encountered in most of the civil and environmental applications where these materials are used. GSE geonets are formulated to be resistant to ultraviolet light for time periods necessary to complete installation. GSE HyperNet geonets are available in standard, HF, HS, and UF varieties.

The table below provides index physical, mechanical and hydraulic characteristics of GSE geonets. Contact GSE for information regarding performance of these products under site-specific load, gradient, and boundary conditions.

Product Specifications

TESTED PROPERTY	TEST METHOD	FREQUENCY	MINIMUM AVERAGE ROLL VALUE[b]			
			HyperNet	HyperNet HF	HyperNet HS	HyperNet UF
Product Code			XL4000N004	XL5000N004	XL7000N004	XL8000N004
Transmissivity[a], gal/min/ft (m^2/sec)	ASTM D 4716	1/540,000 ft^2	9.66 (2 x 10^{-3})	14.49 (3 x 10^{-3})	28.98 (6 x 10^{-3})	38.64 (8 x 10^{-3})
Thickness, mil (mm)	ASTM D 5199	1/50,000 ft^2	200 (5)	250 (6.3)	275 (7)	300 (7.6)
Density, g/cm^3	ASTM D 1505	1/50,000 ft^2	0.94	0.94	0.94	0.94
Tensile Strength (MD), lb/in (N/mm)	ASTM D 5035	1/50,000 ft^2	45 (7.9)	55 (9.6)	65 (11.5)	75 (13.3)
Carbon Black Content, %	ASTM D 1603, modified	1/50,000 ft^2	2.0	2.0	2.0	2.0
Roll Width[c], ft (m)			15 (4.6)	15 (4.6)	15 (4.6)	15 (4.6)
Roll Length[c], ft (m)			300 (91)	250 (76)	220 (67)	200 (60)
Roll Area, ft^2 (m^2)			4,500 (418)	3,750 (348)	3,300 (305)	3,000 (278)

NOTES:

- [a]Gradient of 0.1, normal load of 10,000 psf, water at 70° F (20° C), between steel plates for 15 minutes.
- [b]These are MARV values that are based on the cumulative results of specimens tested by GSE.
- [c]Roll widths and lengths have a tolerance of ±1%.

DS017 HyperNet R01/13/06

This information is provided for reference purposes only and is not intended as a warranty or guarantee. GSE assumes no liability in connection with the use of this information. Please check with GSE for current, standard minimum quality assurance procedures and specifications.

GSE and other trademarks in this document are registered trademarks of GSE Lining Technology, Inc. in the United States and certain foreign countries.

North America	GSE Lining Technology, Inc.	Houston, Texas	800 435 2008	281 443 8564	Fax: 281 230 8650
South America	GSE Lining Technology Chile S.A.	Santiago, Chile		56 2 595 4200	Fax: 56 2 595 4290
Asia Pacific	GSE Lining Technology Company Limited	Bangkok, Thailand		66 2 937 0091	Fax: 66 2 937 0097
Europe & Africa	GSE Lining Technology GmbH	Hamburg, Germany		49 40 767420	Fax: 49 40 7674234
Middle East	GSE Lining Technology-Egypt	The 6th of October City, Egypt		202 2 828 8888	Fax: 202 2 828 8889

www.gseworld.com

REFERENCE

EPG SUMP PUMP INFO

SurePump™

Vertical Sump Drainer

EPG's SurePump™ Vertical Sump Drainer (VSD) pumps contaminated liquids for recovery, leachate collection, gas condensate removal, and sampling applications. It can be used in aggressive environments. Other designs may fail while EPG Vertical Sump Drainers are still going strong. EPG backs the vertical sump drainers with a one year warranty effective the date of installation. For more information please call the experts at EPG companies Inc.

- Stainless steel construction
- Corrosion resistant
- E-Glide™ bearings for extra durability
- Teflon seal rings
- Franklin Electric motor
- Sealed unit with liquid flow drawn past motor for cooling
- Facilitates drawdown to the very bottom of the vessel
- Chemical resistant jacketed CP motor lead
- Vent valve system purges air from the sump drainer preventing pump air lock
- Flow rates available from 2 - 1,200 gpm
- UL listed control panels are available for precise control

Leachate Pumps • Remediation • Control Systems Integration • Telemetry

Sold By:

(763) 424-2613 (800) 443-7426 FAX: (763) 493-4812

Manufacturer of Environmental & Industrial Solutions

EPG COMPANIES

Mailing Address
P.O. Box 427
Rogers, MN 55374

Corporate Offices
19900 County Road 81
Maple Grove, MN 55311
www.epgco.com
info@epgco.com

Bulletin 0330c

SERIES 12 SurePump™

Flow Range 35-75 GPM

60 Hz

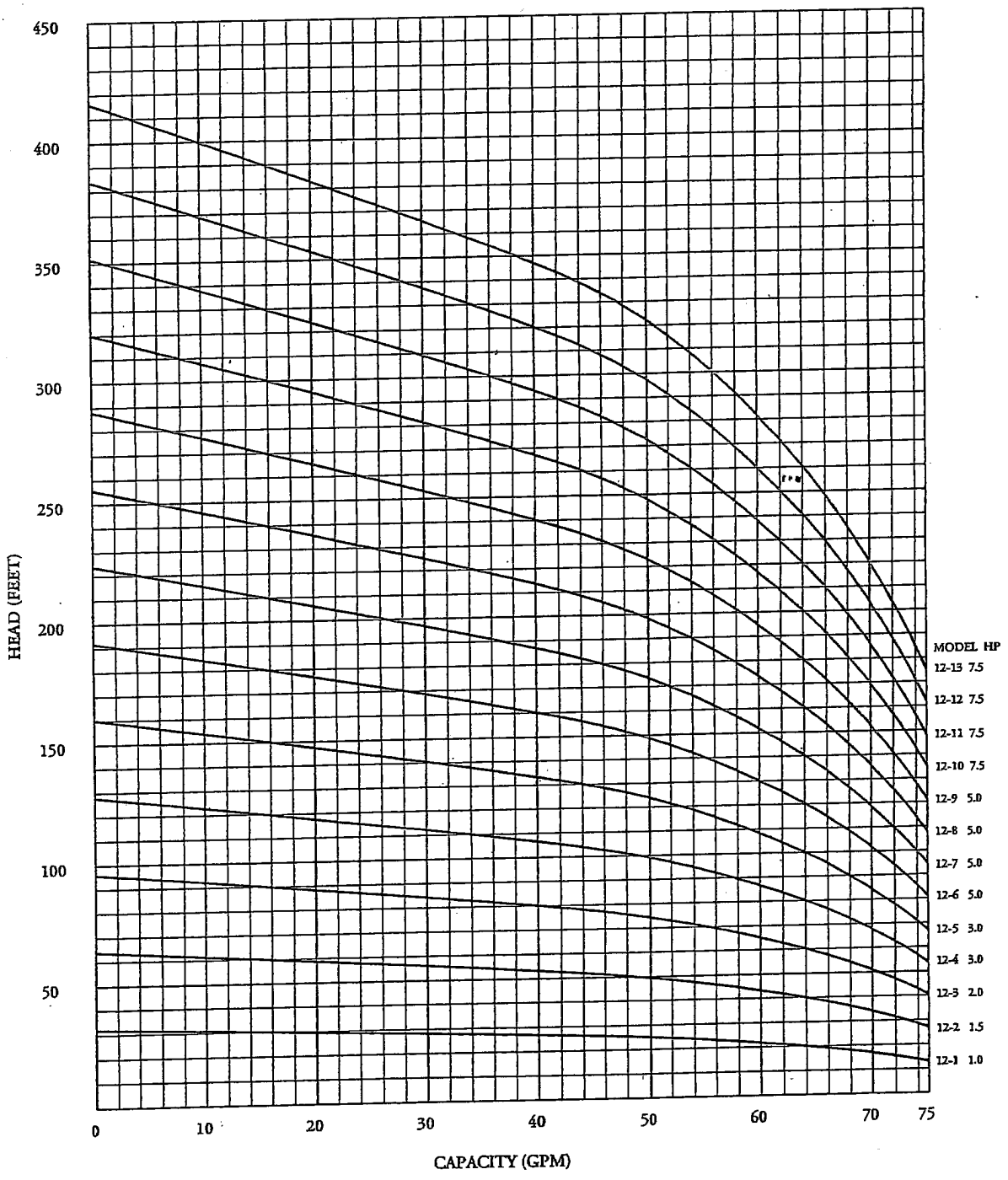

DATA SUBJECT TO CHANGE WITHOUT NOTICE

© 2003 EPG Companies Inc.
SurePump is a Reg. TM of EPG Companies Inc.

REFERENCE

1996 CALCULATION

C.9 LDS FLOW CAPACITY AND PUMP SIZING

Environmental Solutions, Inc.

By: RVH
Date: 1/19/96

Subject: Beatty Landfill-Cell 12
American Ecology Corporation

Checked By: EC
Checked On: 3/8/96

LDS Flow Capacity (Action Leakage Rate) and Pump Sizing

Purpose:

1. Determination of the action leakage rate (ALR) for each of the three sumps proposed for Cell 12 in the Beatty Landfill.

Method:

1. Identify applicable regulations and standards.
2. Generate conceptual sump geometry.
3. Determine flow capacities of the selected drainage elements
4. Refine sump geometry as necessary, and identify controlling flow section.
5. Calculate ALR for Cell 12 sumps.

Summary

1. Double layers of geocomposite are required for each sump at the grade break to provide sufficient flow capacity.
2. Sumps in cell corners require geonet rather than geocomposite to provide adequate flow capacity due to reduction of effective perimeter.
3. ALR's for sumps are as follows:

Sump	Total Area	ALR
12A	3.49 ac	200 gpad
12B	2.45 ac	185 gpad
12C	2.87 ac	212 gpad

4. Variable speed recipricating pumps, identical to those used in the LCRS are recommended for use.

Analysis:

Applicable Regulations

1. By regulatory definition (Reference 1A) the ALR is the maximum design flow rate the leak detection system (LDS) can convey without the fluid head on the secondary, composite, liner exceeding one foot.

Typical Geometry

1. The typical bottom liner is shown below in Figure 1:

LDS Flow Capacity (Action Leakage Rate) and Pump Sizing

Figure 1

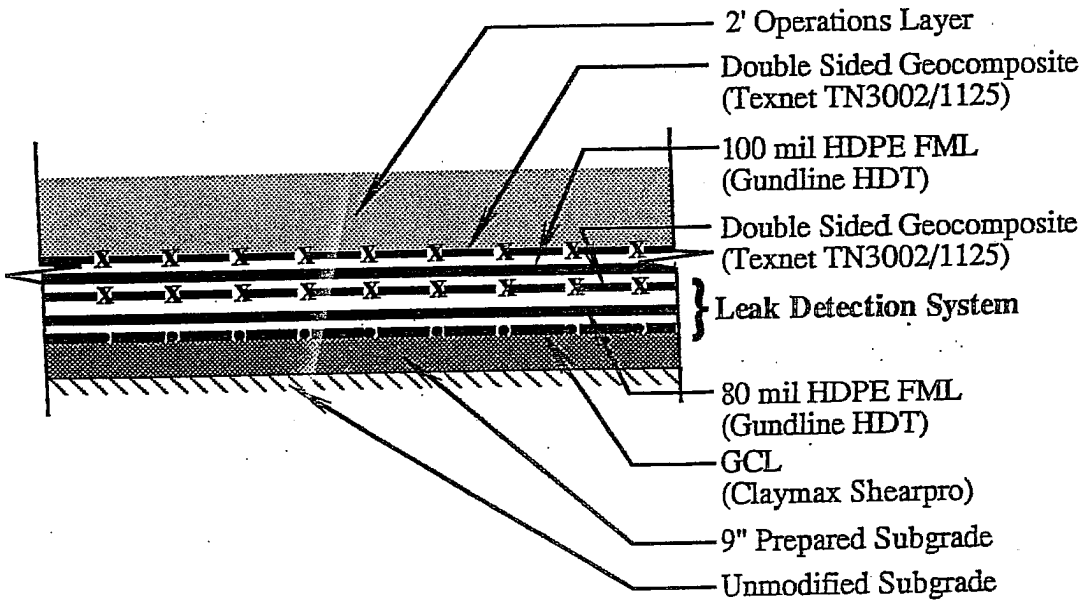

2. The sump locations are shown on Figure 2 (Attached). There are three sumps proposed for Cell 12. The typical geometry is shown in Figure 3 (Attached).

Flow Capacities

1. The following flow elements will be used in the LDS

   - Double sided geocomposite (Texnet TN3002/1125)
   - Geonet (Polynet PN3000)-used in the sump areas if additional flow capacity is required.
   - Gravel (clean, poorly graded, nominal 3/4" diameter)-used in the sump proper only.

2. The double sided geocomposite is used in the slope liner LDS as well as in the bottom liner as shown in Figure 1. A continuous strip of geocomposite will be used for each system. Therefore flow within the LDS will be controlled by the minimum bottom slope.

3. Flow within the geosynthetics is calculated using Darcy's Equation (which assumes laminar flow within the net) as follows (Reference 2A):

LDS Flow Capacity (Action Leakage Rate) and Pump Sizing

$$q = \Theta_{eff} i \qquad (1)$$

Where:

q = flow per unit width

Θ_{eff} = effective transmissivity

i = hydraulic gradient

Flow within the gravel also uses Darcy's formula, however, transmissivity is replaced with hydraulic conductivity and the thickness of the flow area.

4. Effective transmissivity for the geosynthetics is calculated by applying several safety factors to the published transmissivity value. The following formula (Reference 2B) is used for that calculation, definitions are provided in the attached reference:

$$\Theta_{eff} = \frac{\Theta}{(FS_{CR} \times FS_{IN} \times FS_{CC} \times FS_{BC})} \qquad (2)$$

5. The following table shows the unit flow capacity for the geosynthetic elements and the gravel based on the applicable transmissivity, or hydraulic conductivities, hydraulic gradients, and safety factors:

Table 1

Flow Element	Θ	FS_{CR}	FS_{IN}	FS_{CC}	FS_{BC}	Θ_{eff}[1]	i	q	q
Units:	m2/s	NA	NA	NA	NA	m2/s	NA	m3/m-s	gal/ft-day
TN3002/1125	2.20E-04	1.4	1.5	1.5	1.5	4.66E-05	0.01	4.66E-07	3.24
PN3000	2.00E-03	1.4	1.5	1.5	1.5	4.23E-04	0.01	4.23E-06	29.45
TN3002/1125	2.20E-04	1.4	1.5	1.5	1.5	4.66E-05	0.1	4.66E-06	32.39
PN3000	2.00E-03	1.4	1.5	1.5	1.5	4.23E-04	0.1	4.23E-05	294.47

Transmissivity values are provided by the manufacturer (Reference 3A and 3B). Safety factors are taken from the literature and are attached (Reference 2C). Flow capacities are shown at hydraulic gradients of 1 percent and 10 percent for the nominal cell bottom slope and the minimum sump slope, respectively. Since the gravel is used only within the minimum sump boundaries around the riser pipes, flow capacities are calculated for the geosynthethics only.

Controlling Section

1. As shown in Figure 3 there are two potentially controlling sections: 1) the 7'x7' LDS perimeter; and 2) the perimeter at the grade break between the 1 and 10 percent slopes. In the controlling sections multiple layers of geocomposite or geonet alone may be used to provide sufficient flow capacity.

[1] The effective transmissivity of the geocomposite (using the factors of safety listed in Table 1) still exceeds the minimum transmissivity requirement (3×10^{-5} m^2/s) of 40 CFR § 264.301(c)(3)(ii).

Environmental Solutions, Inc.

By: RVH
Date: 1/19/96

Subject: Beatty Landfill-Cell 12
American Ecology Corporation

Checked By: EC
Checked On: 3/8/96

LDS Flow Capacity (Action Leakage Rate) and Pump Sizing

2. Using EPA guidelines (Reference 4A) the sumps will be designed for a nominal ALR of 200 gallons per acre per day (gpad). Total flow for each cell is shown in Table 2, below:

Table 2

Sump	Tributary Area (ac)	Total Flow (gpd)
12A	3.49	698
12B	2.45	490
12C	2.87	574

Since the maximum flow to the sump is only about 0.5 gpm (Sump 12A ALR), the Protec recipricating pumps recommended in the LCRS calculation are acceptable units. It is anticipated that liquid will be allowed to accumulate in the LDS until sufficient volume is present to remove efficiently with a pump. At no time however, would more than 12 inches of fluid be allowed to collect over the liner system.

2. Each sump has a nominal perimeter of 70 feet (Figure 3), however sumps 1 and 3 have one short edge near the slope. Therefore, as a conservatism, the effective perimeter for each cell will be reduced by 25 percent to 53 feet. Table 3 shows the minimum length (i.e., perimeter) required to accomdate the total flow for each sump using the various flow elements. Since gravel is not used outside of the sumps, perimeters are calculated for only the geosynthetics.

Table 3

		Min. Perimeter Length (ft) Required for Flow at i=.01			
		No. of Geocomposites			
Sump	Design Flow (gpd)	1	2	3	Geonet
12A	698	215	108	72	24
12B	490	151	76	50	17
12C	574	177	89	59	19

3. Given the minimum grade break perimeter of 53 feet triple geocomposite layers are adequate for only sump 12B. Also note that geonet is adequate in all cases. Hence, geonet will be used between the grade break and the perimeter. Double geocomposite provides adequate flow capacity beyond the grade break perimeter.

4. Within the 7'x7' area, the minimum perimeter is 21 feet (Figure 3). As shown in Table 4, below, a single geocomposite layer has sufficient flow capacity to accomodate the design ALR. However geonet will also be used in the 10 percent slope areas, to facilitate construction and prevent capacity losses in the transition between the higher capacity geonet and the double geocomposite.

Environmental Solutions, Inc.

By: RVH
Date: 1/19/96

Subject: Beatty Landfill-Cell 12
American Ecology Corporation

Checked By: EC
Checked On: 3/8/96

LDS Flow Capacity (Action Leakage Rate) and Pump Sizing

Table 4

Sump	Design Flow (gpd)	Min. Perimeter Length (ft) Required for Flow at i=.10 No. of Geocomposites 1	2	3	Geonet
12A	698	22	11	7	2
12B	490	15	8	5	2
12C	574	18	9	6	2

ALR

1. Using the perimeters identified above, flow elements are arranged for each sump. Figure 4 is the arrangement for Sump 12A.

Figure 4

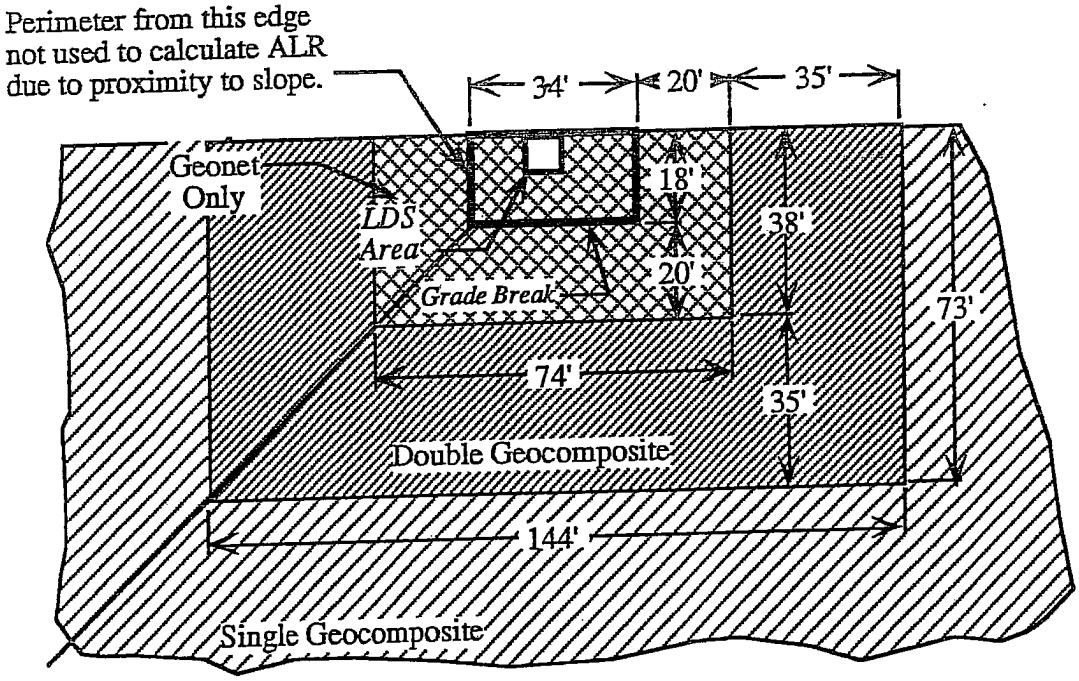

Sump 12A

The ALR for Sump 12A is controlled by the minimum perimeter of the single geocomposite layer. The perimeter and resulting ALR are:

LDS Flow Capacity (Action Leakage Rate) and Pump Sizing

$$Perim = 144\,ft + 73\,ft$$
$$= 217\,ft$$

$$Capacity = 217\,ft\left(3.24\frac{\text{gal}}{\text{ft - day}}\right)$$
$$= 703\text{gpd}$$

$$\text{ALR} = \frac{703\text{gpd}}{3.49\text{ac}} = 201\text{gpad} \approx 200\text{gpad}$$

2. None of theSump 12B flow edges are located next to a slope. Therefore the entire perimeter is available to collect leakage. As shown in Table 3 the double geocomposite provides nearly enough capacity for the design ALR of 200 gpad at thegrade break. On the 1 percent side of the grade break double and single geocomposite will be used as shown in Figure 5. On the 10 percent side of thegrade break geonet will be used as for the other sumps.

Figure 5

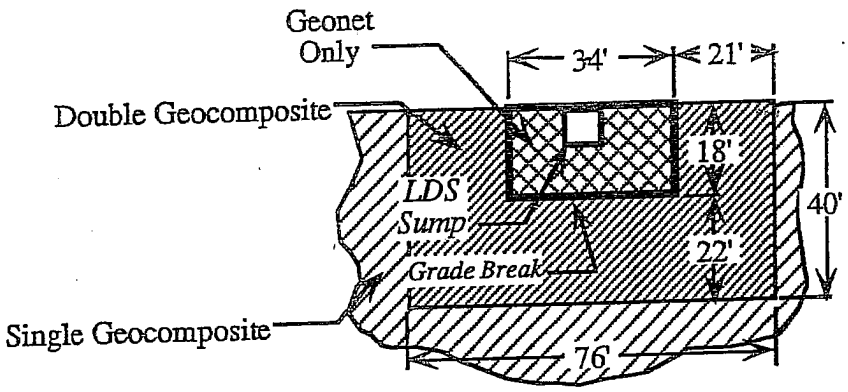

Sump 12B

The ALR for Sump 12B is controlled by the minimum perimeter of the double geocomposite layer. The perimeter and resulting ALR are:

$$Perim = 34\,ft + 18\,ft + 18\,ft$$
$$= 70\,ft$$

$$Capacity = 70\,ft \times 2\left(3.24\frac{\text{gal}}{\text{ft - day}}\right)$$
$$= 453\text{gpd}$$

$$\text{ALR} = \frac{453\text{gpd}}{2.45\text{ac}} = 185\text{gpad}$$

LDS Flow Capacity (Action Leakage Rate) and Pump Sizing

Although slightly less than the design ALR, it is within 5 percent and therefore adequate.

3. Sump 12C is situated similar to Sump 12A. Flow elements are arranged as shown in Figure 6.

Figure 6

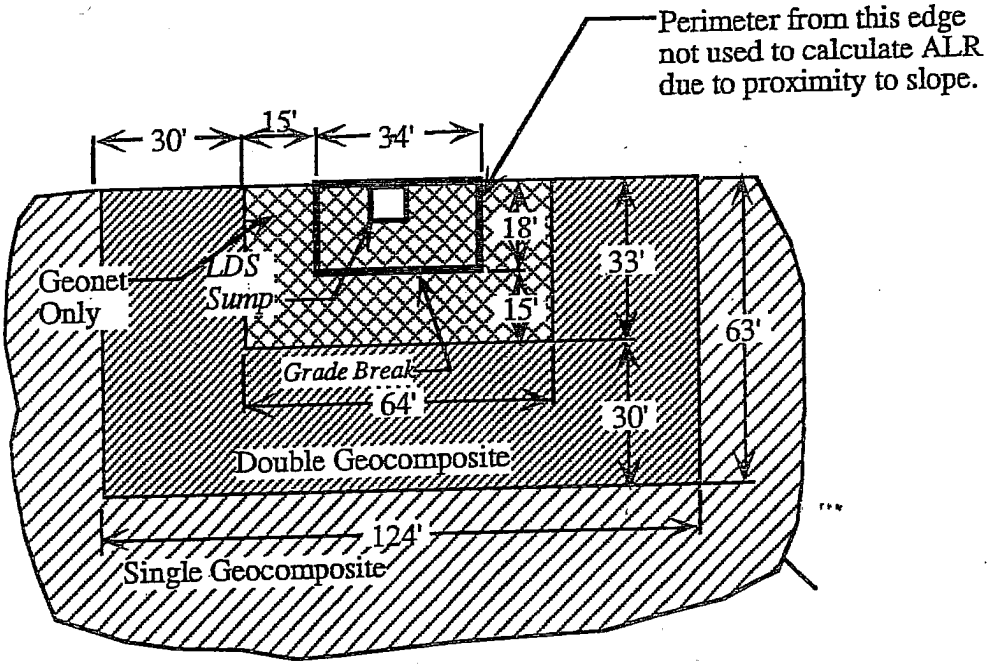

Sump 12C

The ALR for Sump 12C is controlled by the minimum perimeter of the single geocomposite layer. The perimeter and resulting ALR are:

$$Perim = 124\,ft + 64\,ft$$
$$= 188\,ft$$

$$Capacity = 188\,ft\left(3.24\frac{\text{gal}}{\text{ft - day}}\right)$$
$$= 609\,\text{gpd}$$

$$\text{ALR} = \frac{609\,\text{gpd}}{2.87\,\text{ac}} = 212\,\text{gpad}$$

4. Double layers of geocomposite will consist of a double-sided geocomposite overlain by a single-sided geocomposite with the geotextile up. At the transition between the single layer to the double layer, a one foot width of the upper geotextile of the double-sided geocomposite will be removed so that the geonet elements of each are in contact.

~85'
1.5:1 = MIDHEIGHT PERIMETER (MHP)
0.5:1

85' x MHP = SLOPE AREA

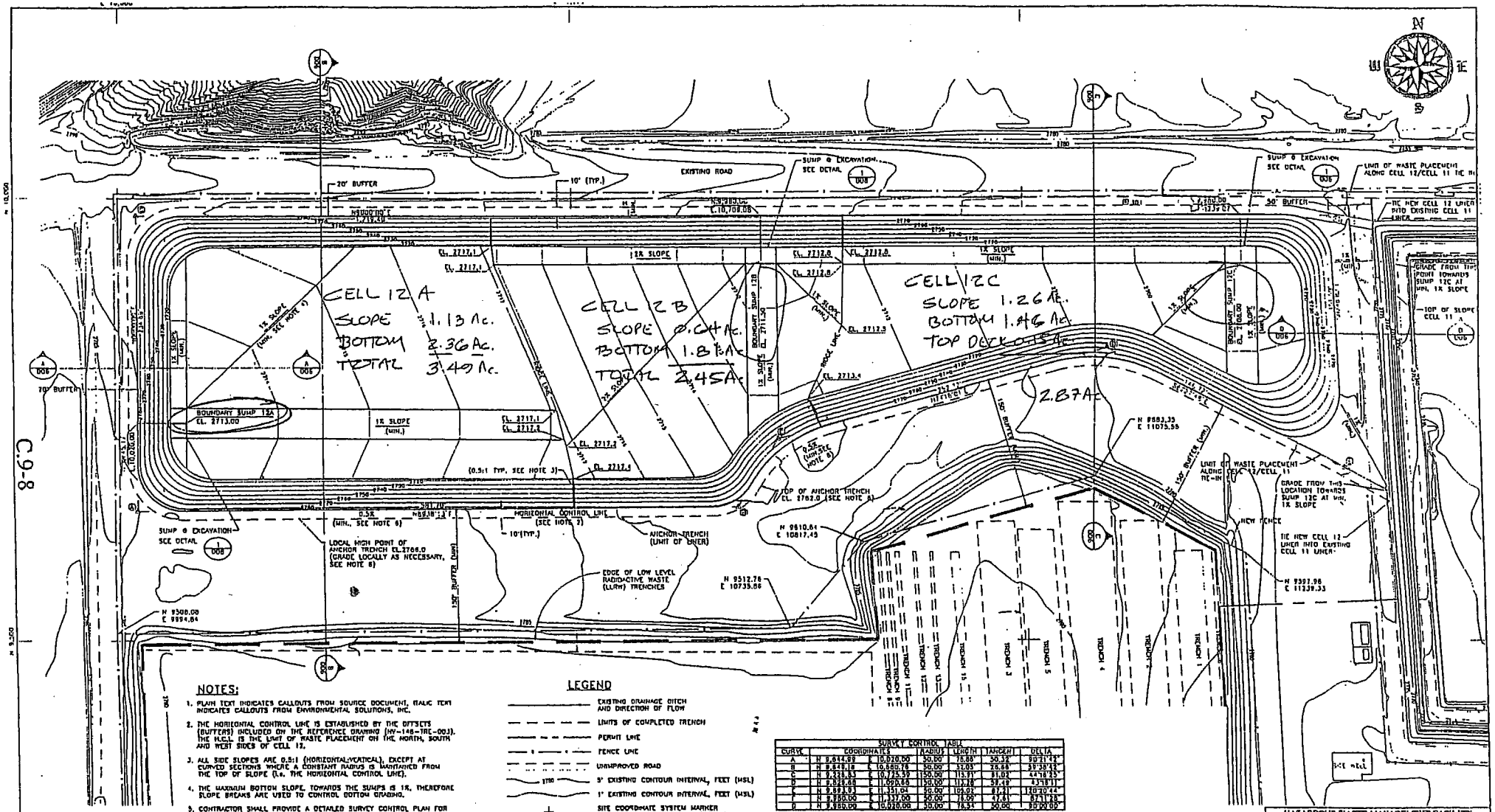

NOTES:

1. PLAIN TEXT INDICATES CALLOUTS FROM SOURCE DOCUMENT, ITALIC TEXT INDICATES CALLOUTS FROM ENVIRONMENTAL SOLUTIONS, INC.
2. THE HORIZONTAL CONTROL LINE IS ESTABLISHED BY THE OFFSETS (BUFFERS) INCLUDED ON THE REFERENCE DRAWING (NV-148-TRE-003). THE H.C.L. IS THE LIMIT OF WASTE PLACEMENT ON THE NORTH, SOUTH AND WEST SIDES OF CELL 12.
3. ALL SIDE SLOPES ARE 0.5:1 (HORIZONTAL:VERTICAL), EXCEPT AT CURVED SECTIONS WHERE A CONSTANT RADIUS IS MAINTAINED FROM THE TOP OF SLOPE (i.e. THE HORIZONTAL CONTROL LINE).
4. THE MAXIMUM BOTTOM SLOPE, TOWARDS THE SUMPS IS 1%, THEREFORE SLOPE BREAKS ARE USED TO CONTROL BOTTOM GRADING.
5. CONTRACTOR SHALL PROVIDE A DETAILED SURVEY CONTROL PLAN FOR APPROVAL, BASED ON THE HORIZONTAL CONTROL PRIOR TO COMMENCING WORK.
6. PROVIDE LOCAL GRADING AS NECESSARY TO ESTABLISH MINIMUM ANCHOR TRENCH FLOWLINES, WHICH ARE REQUIRED FOR THE COVER SYSTEM DRAIN PIPE (SEE SHEET 4).

LEGEND

- EXISTING DRAINAGE DITCH AND DIRECTION OF FLOW
- LIMITS OF COMPLETED TRENCH
- PERMIT LINE
- FENCE LINE
- UNIMPROVED ROAD
- 1780 — 5' EXISTING CONTOUR INTERVAL, FEET (MSL)
- 1' EXISTING CONTOUR INTERVAL, FEET (MSL)
- + SITE COORDINATE SYSTEM MARKER LOCATION IN NORTHING AND EASTING
- • J02 MONITOR WELL LOCATION AND NUMBER

SCALE: 50 25 0 50 FEET

DATE OF AERIAL TOPOGRAPHY: JUNE 1994

SURVEY CONTROL TABLE

CURVE	COORDINATES	RADIUS	LENGTH	TANGENT	DELTA
A	N 9,844.89 E 10,820.00	50.00'	78.88'	50.32'	90°21'45"
B	N 9,845.18 E 10,880.78	50.00'	32.05'	26.68'	37°38'42"
C	N 9,738.53 E 10,725.59	150.00'	113.71'	61.02'	44°78'25"
D	N 9,548.88 E 11,000.86	50.00'	112.78'	58.49'	43°18'11"
E	N 9,593.93 E 11,351.04	50.00'	109.02'	87.31'	120°30'44"
F	N 9,550.00 E 11,337.00	50.00'	78.09'	47.61'	87°11'18"
G	N 9,550.00 E 10,820.00	50.00'	78.54'	50.00'	90°00'00"

Rev	Drawn	Check	Appr	Date	Description
J	DKK			3/95	REDESIGN OF CELL 12 ABOVE GRADE
I	DKK	JGS	SGO	10/94	ADDED COORDINATES TO LINER PERIMETER
1	DKK	JGS	SGO	7/94	SITE TOPO/LINER EXP REVISED PER SURVEY 6/94

REVISIONS

American Ecology
5333 WESTHEIMER
Suite 1000
Houston, Texas 77056

Reference Drawings
NV-148-TRE-003

DRAWN BY BOB JONES

HAZARDOUS WASTE MANAGEMENT FACILITY
U.S. ECOLOGY

EXCAVATION PLAN AND LIMITS OF GRADING CELL 12

ENVIRONMENTAL SOLUTIONS, INC.

JOB NO. 95264
SCALE AS NOTED
D-95264-BL003
REV J

Figure 2
Proposed Sump Location

95224

ENVIRONMENTAL SOLUTIONS, INC.

By RVH Date 1/20/96 Subject BEATTY LANDFILL-CELL 12 Sheet No. 9 of 20

Chkd. By LMG Date 1/23/96 AMERICAN ECOLOGY CORP. Proj. No. 95-284

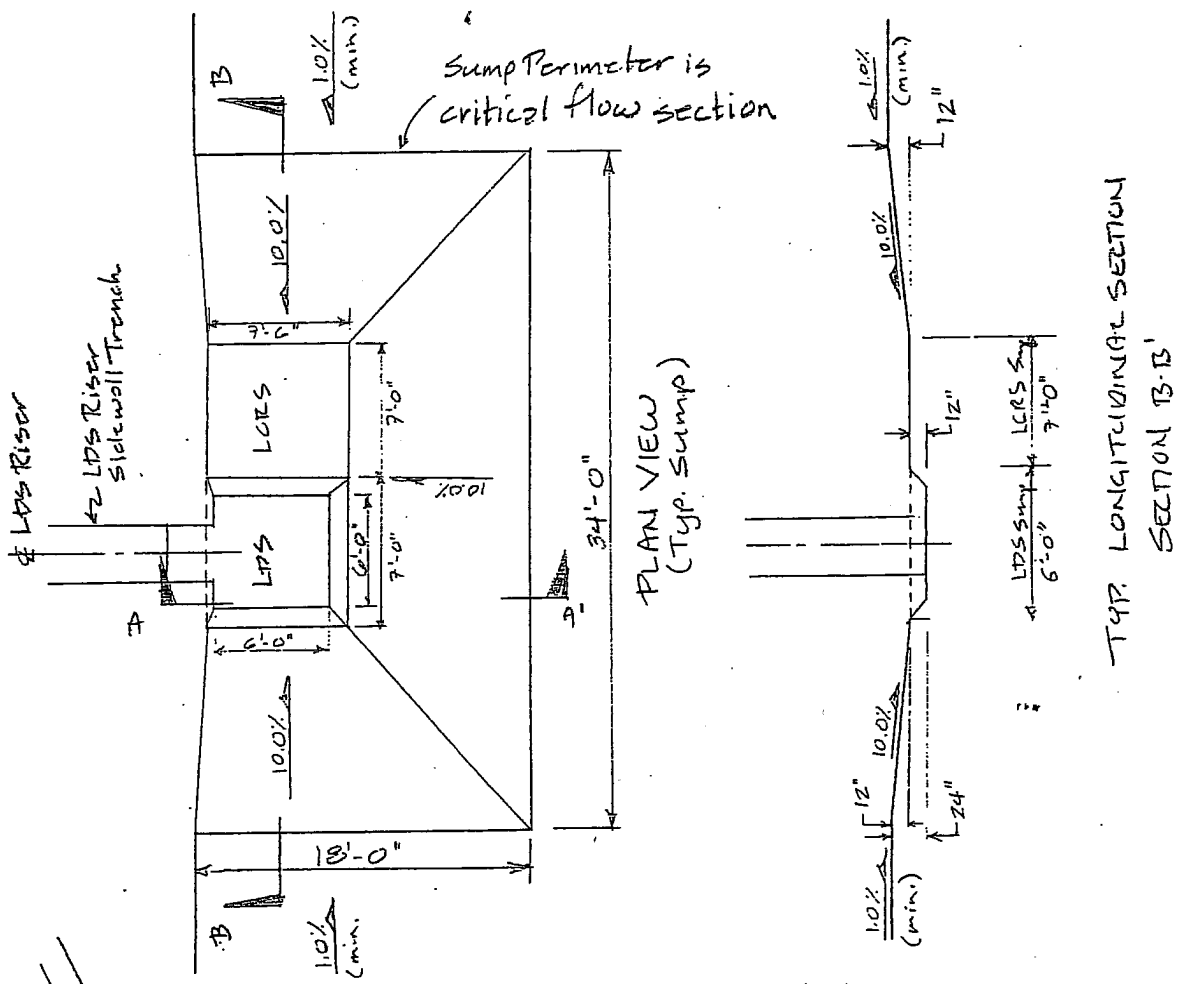

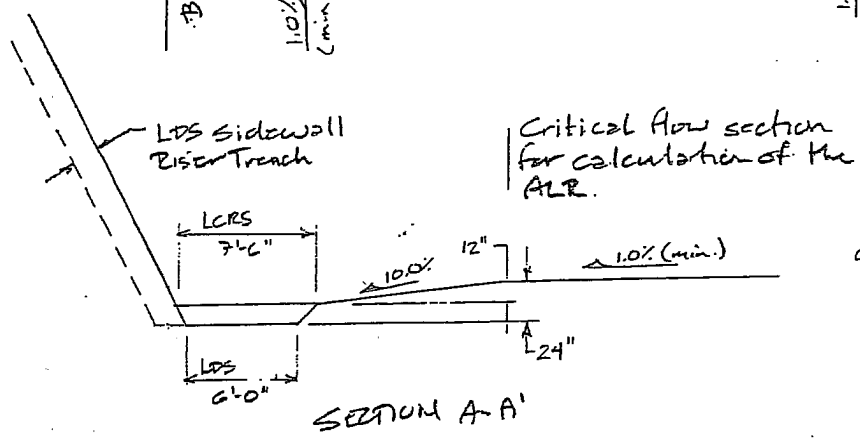

0 10 20 FEET
SCALE

FIGURE 3

TYPICAL SUMP GEOMETRY

Notes:

1) Liner elements & riser pipes not shown for clarity.

Recyclable and made from recycled paper.

(j), and (k) as paragraphs (g), (h), (i), (j), (k), and (l), respectively, by revising paragraphs (c) and (d), and by adding new paragraph (f) to read as follows:

§ 264.301 Design and operating requirements.

LANDFILL

* * * * *

(c) The owner or operator of each new landfill unit on which construction commences after January 29, 1992, each lateral expansion of a landfill unit on which construction commences after July 29, 1992, and each replacement of an existing landfill unit that is to commence reuse after July 29, 1992 must install two or more liners and a leachate collection and removal system above and between such liners. "Construction commences" is as defined in § 260.10 of this chapter under "existing facility".

(1)(i) The *liner system* must include:

(A) A top liner designed and constructed of materials (e.g., a geomembrane) to prevent the migration of hazardous constituents into such liner during the active life and post-closure care period; and

(B) A composite bottom liner, consisting of at least two components. The upper component must be designed and constructed of materials (e.g., a geomembrane) to prevent the migration of hazardous constituents into this component during the active life and post-closure care period. The lower component must be designed and constructed of materials to minimize the migration of hazardous constituents if a breach in the upper component were to occur. The lower component must be constructed of at least 3 feet (91 cm) of compacted soil material with a hydraulic conductivity of no more than 1×10^{-7} cm/sec.

(ii) The liners must comply with paragraphs (a)(1) (i), (ii), and (iii) of this section.

(2) The *leachate collection and removal system* immediately above the top liner must be designed, constructed, operated, and maintained to collect and remove leachate from the landfill during the active life and post-closure care period. The Regional Administrator will specify design and operating conditions in the permit to ensure that the leachate depth over the liner does not exceed 30 cm (one foot). The leachate collection and removal system must comply with paragraphs (3)(c) (iii) and (iv) of this section.

(3) The *leachate collection and removal system* between the liners, and immediately above the bottom composite liner in the case of multiple leachate collection and removal systems, is also a *leak detection system*. This leak detection system must be capable of detecting, collecting, and removing leaks of hazardous constituents at the earliest practicable time through all areas of the top liner likely to be exposed to waste or leachate during the active life and post-closure care period. The requirements for a leak detection system in this paragraph are satisfied by installation of a system that is, at a minimum:

(i) Constructed with a bottom slope of one percent or more;

(ii) Constructed of granular drainage materials with a hydraulic conductivity of 1×10^{-2} cm/sec or more and a thickness of 12 inches (30.5 cm) or more; or constructed of synthetic or geonet drainage materials with a transmissivity of 3×10^{-5} m^2/sec or more;

(iii) Constructed of materials that are chemically resistant to the waste managed in the landfill and the leachate expected to be generated, and of sufficient strength and thickness to prevent collapse under the pressures exerted by overlying wastes, waste cover materials, and equipment used at the landfill;

(iv) Designed and operated to minimize clogging during the active life and post-closure care period; and

(v) Constructed with sumps and liquid removal methods (e.g., pumps) of sufficient size to collect and remove liquids from the sump and prevent liquids from backing up into the drainage layer. Each unit must have its own sump(s). The design of each sump and removal system must provide a method for measuring and recording the volume of liquids present in the sump and of liquids removed.

(4) The owner or operator shall collect and remove pumpable liquids in the leak detection system sumps to minimize the head on the bottom liner.

(5) The owner or operator of a leak detection system that is not located completely above the seasonal high water table must demonstrate that the operation of the leak detection system will not be adversely affected by the presence of ground water.

(d) The Regional Administrator may approve alternative design or operating practices to those specified in paragraph (c) of this section if the owner or operator demonstrates to the Regional Administrator that such design and operating practices, together with location characteristics:

(1) Will prevent the migration of any hazardous constituent into the ground water or surface water at least as effectively as the liners and leachate collection and removal systems specified in paragraph (c) of this section; and

(2) Will allow detection of leaks of hazardous constituents through the top liner at least as effectively.

* * * * *

(f) The owner or operator of any replacement landfill unit is exempt from paragraph (c) of this section if:

(1) The existing unit was constructed in compliance with the design standards of section 3004(o)(1)(A)(i) and (o)(5) of the Resource Conservation and Recovery Act; and

(2) There is no reason to believe that the liner is not functioning as designed.

* * * * *

13. New § 264.302 is added to read as follows:

§ 264.302 Action leakage rate.

(a) The Regional Administrator shall approve an action leakage rate for surface impoundment units subject to § 264.301(c) or (d). The action leakage rate is the maximum design flow rate that the leak detection system (LDS) can remove without the fluid head on the bottom liner exceeding 1 foot. The action leakage rate must include an adequate safety margin to allow for uncertainties in the design (e.g., slope, hydraulic conductivity, thickness of drainage material), construction, operation, and location of the LDS, waste and leachate characteristics, likelihood and amounts of other sources of liquids in the LDS, and proposed response actions (e.g., the action leakage rate must consider decreases in the flow capacity of the system over time resulting from siltation and clogging, rib layover and creep of synthetic components of the system, overburden pressures, etc.).

(b) To determine if the action leakage rate has been exceeded, the owner or operator must convert the weekly or monthly flow rate from the monitoring data obtained under § 264.303(c), to an average daily flow rate (gallons per acre per day) for each sump. Unless the Regional Administrator approves a different calculation, the average daily flow rate for each sump must be calculated weekly during the active life and closure period, and monthly during the post-closure care period when monthly monitoring is required under § 264.303(c).

14. Section 264.303 is amended by adding new paragraph (c) to read as follows:

§ 264.303 Monitoring and inspection.

* * * * *

(c)(1) An owner or operator required to have a leak detection system under § 264.301(c) or (d) must record the amount of liquids removed from each leak detection system sump at least

SHEET 11 OF 20
REF 2

KOERNER

DESIGNING WITH GEOSYNTHETICS

Third Edition

Third Edition

DESIGNING WITH GEOSYNTHETICS

ROBERT M. KOERNER

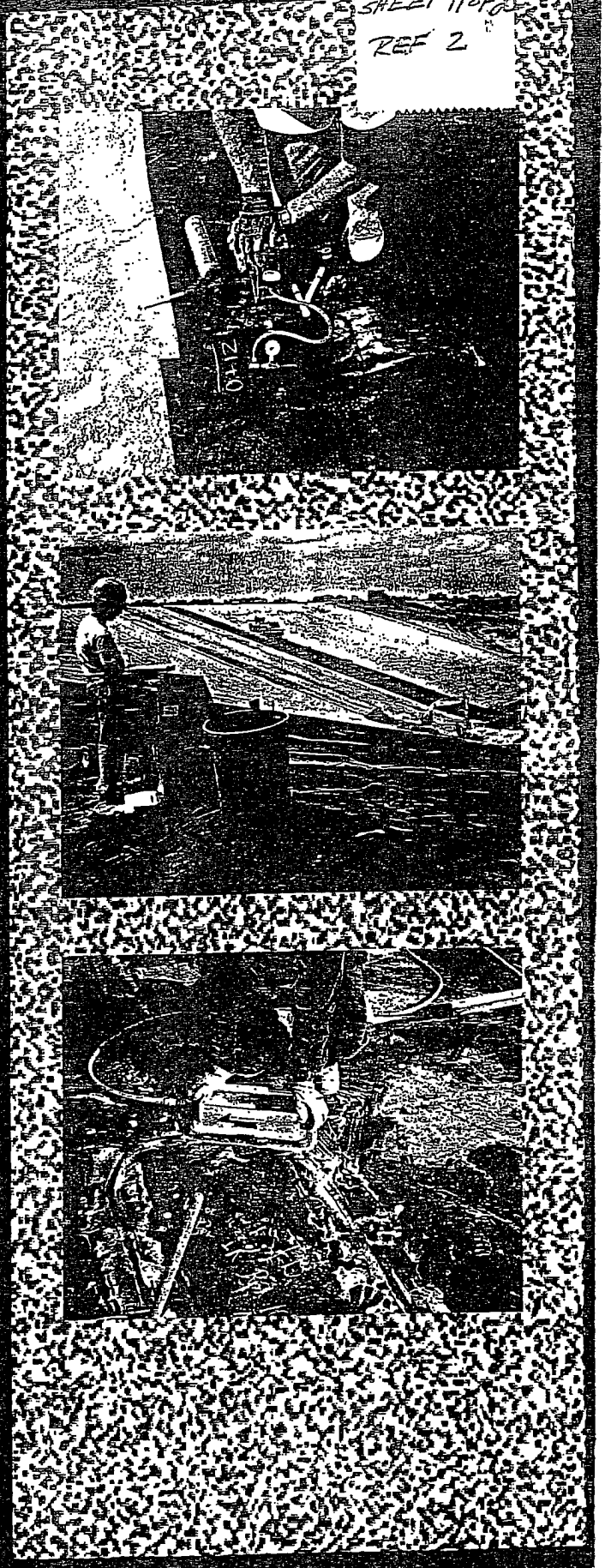

C.9-11

SHEET 12 OF 20
REF 2A

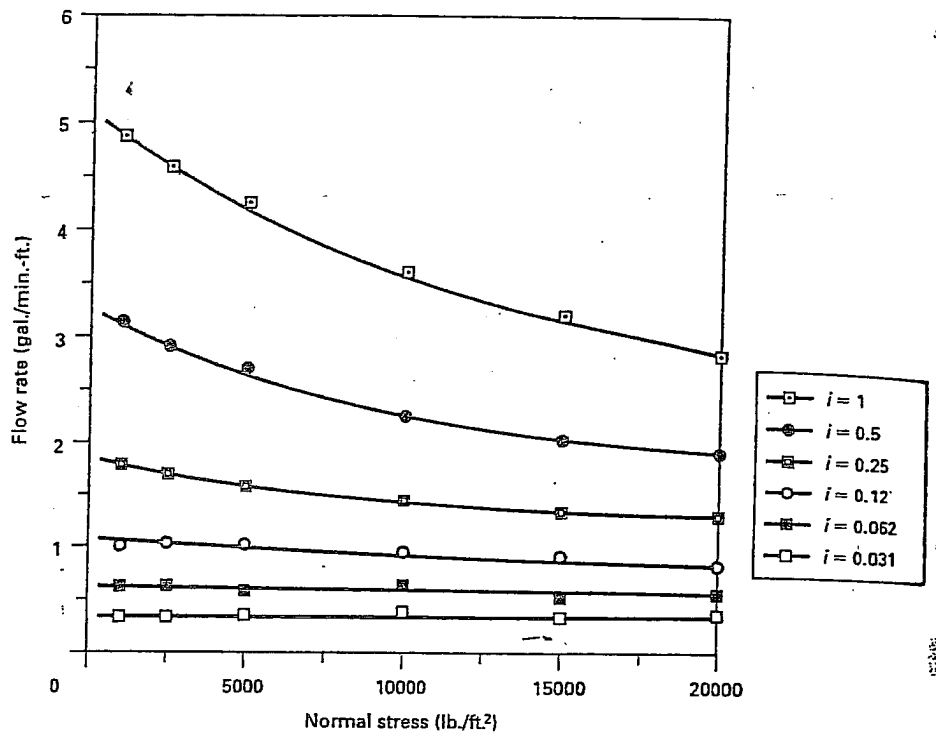

Figure 4.8 Flow rate behavior of a 0.25-in. (6.3-mm) geonet sandwiched between a 16-oz./yd.² (540-g/m²) nonwoven needle-punched geotextile with clay above and a 60-mil (1.5-mm) HDPE geomembrane below.

met with the typical flow regime in a geonet. Yet current EPA Leak Detection regulations [2] state the following:

- For landfills and waste piles, the geonet's transmissivity must be

$$\theta \geq 3 \times 10^{-5}\ \text{m}^2/\text{sec}.$$

- For surface impoundments, the geonet's transmissivity must be

$$\theta \geq 3 \times 10^{-4}\ \text{m}^2/\text{sec}.$$

One converts from flow rate per unit width to transmissivity as follows:

$$q = kiA \tag{4.1}$$

$$q = ki(t \times W)$$

$$q/W = i(k \times t)$$

$$q/W = i\theta \tag{4.2}$$

SHEET 13 OF 20
REF 26

generated value is an ultimate value which, using ASTM D4716 for flow rate determination, must be reduced before use in design; that is,

$$q_{\text{allow}} < q_{\text{ult}}$$

One way of doing this is to ascribe partial factors of safety on each of the items not adequately assessed in the laboratory test. For example,

$$q_{\text{allow}} = q_{\text{ult}}\left[\frac{1}{FS_{IN} \times FS_{CR} \times FS_{CC} \times FS_{BC}}\right] \tag{4.5}$$

or if all of the partial factors of safety are lumped together,

$$q_{\text{allow}} = q_{\text{ult}}\left[\frac{1}{\Sigma\, FS_p}\right] \tag{4.6}$$

where q_{ult} = the flow rate determined from ASTM D4716 for short-term tests between solid plates using water as the transported liquid under laboratory test temperatures,

q_{allow} = the allowable flow rate to be used in Equation 4.3 for final design purposes,

FS_{IN} = the factor of safety for elastic deformation, or intrusion, of the adjacent geosynthetics into the geonet's core space,

FS_{CR} = the factor of safety for creep deformation of the geonet and/or adjacent geosynthetics into the geonet's core space,

FS_{CC} = the factor of safety for chemical clogging and/or precipitation of chemicals in the geonet's core space,

FS_{BC} = the factor of safety for biological clogging in the geonet's core space, and

$\Sigma\, FS_p$ = the *product* of all partial factors of safety for the site-specific conditions.

Some guidelines for various factors of safety to be used in different situations are given in Table 4.2. Example problems follow, which illustrate the use of geonets and point out that high factors of safety are warranted in critical situations. Please note that these values are based on preliminary and relatively sparse information. Other factors of safety, such as installation damage, temperature effects, and liquid turbidity, could also have been included. If needed they can be included on a site-specific basis. On the other hand, if the test method has included the particular item, it would appear in the foregoing formulation as a value of unity.

Example:

What is the allowable geonet flow rate to be used in the design of a capillary break beneath a roadway to prevent frost heave? Assume that laboratory testing was

SHEET 14 OF 22
REF 2C

Table 4.2 Recommended preliminary factor of safety values for determining allowable flow rate or transmissivity of geonets

	Partial Factor of Safety Value in Equation 4.5			
Application Area	FS_{IN}	FS_{CR}*	FS_{CC}	FS_{BC}
Sport fields	1.0 to 1.2	1.0 to 1.5	1.0 to 1.2	1.1 to 1.3
Capillary breaks	1.1 to 1.3	1.0 to 1.2	1.1 to 1.5	1.1 to 1.3
Roof and plaza decks	1.2 to 1.4	1.0 to 1.2	1.0 to 1.2	1.1 to 1.3
Retaining walls, seeping rock and soil slopes	1.3 to 1.5	1.2 to 1.4	1.1 to 1.5	1.0 to 1.5
Drainage blankets	1.3 to 2	1.2 to 1.4	1.0 to 1.2	1.0 to 1.2
Surface water drains for landfill caps	1.3 to 1.5	1.2 to 1.4	1.0 to 1.2	1.2 to 1.5
Secondary leachate collection (landfills)	1.5 to 2.0	1.4 to 2.0	1.5 to 2.0	1.5 to 2.0
Primary leachate collection (landfills)	1.5 to 2.0	1.4 to 2.0	1.5 to 2.0	1.5 to 2.0

*These values assume that the q_{ult} value was obtained using an applied normal pressure of 1.5 to 2 times the field-anticipated maximum value. If not, values must be increased.

done at the proper design load and hydraulic gradient and that this testing yielded a short-term between-rigid-plates value of 1.2 gal./min.-ft.

Solution: Since better information is not known, average values from Table 4.2 are used.

$$q_{allow} = q_{ult}\left[\frac{1}{FS_{IN} \times FS_{CR} \times FS_{CC} \times FS_{BC}}\right] \tag{4.5}$$

$$= 1.2\left[\frac{1}{1.1 \times 1.1 \times 1.1 \times 1.2}\right]$$

$$= 1.2\left[\frac{1}{1.60}\right]$$

$$= 0.75 \text{ gal./min.-ft.}$$

Example:

What is the allowable geonet flow rate to be used in the design of a secondary leachate collection system? Assume that laboratory testing at proper design load and proper hydraulic gradient gave a short-term between-rigid-plates value of 1.2 gal./min.-ft.

Solution: Average values from Table 4.2 are used; however, note the large reduction.

REF 3
SHEET 15 OF 20

FLUID SYSTEMS, INC.

POLY-NET®

TRANSMISSIVITY – CHARTS

513/771-5656
800/346-9107
FAX - 513/771-4844

32 Triangle Park Drive
Suite 3201
Cincinnati, Ohio 45246

REF 3A

TEX-NET TN3002/1125

plate/FRICTION SEAL/TN3002/1125/FRICTION SEAL/plate

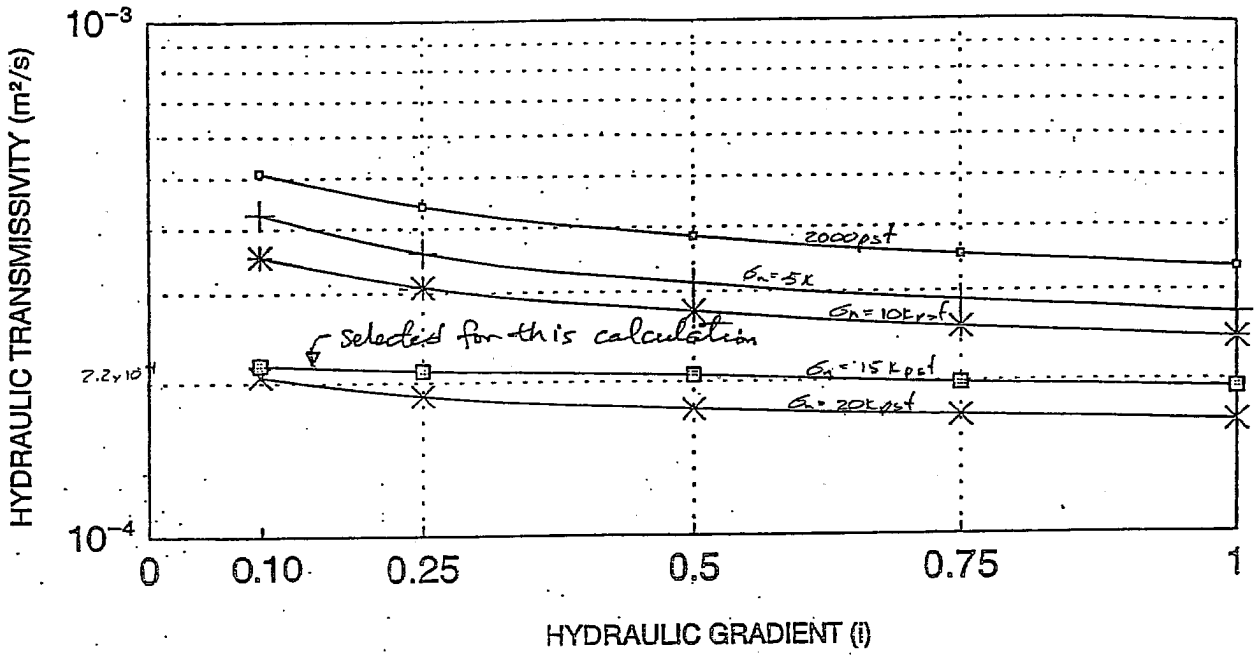

2000 psf
5000 psf
10000 psf
15000 psf
20000 psf

TEX-NET TN3002CN/1125

plate/FRICTION SEAL/TN3002CN/1125/FRICTION SEAL/plate

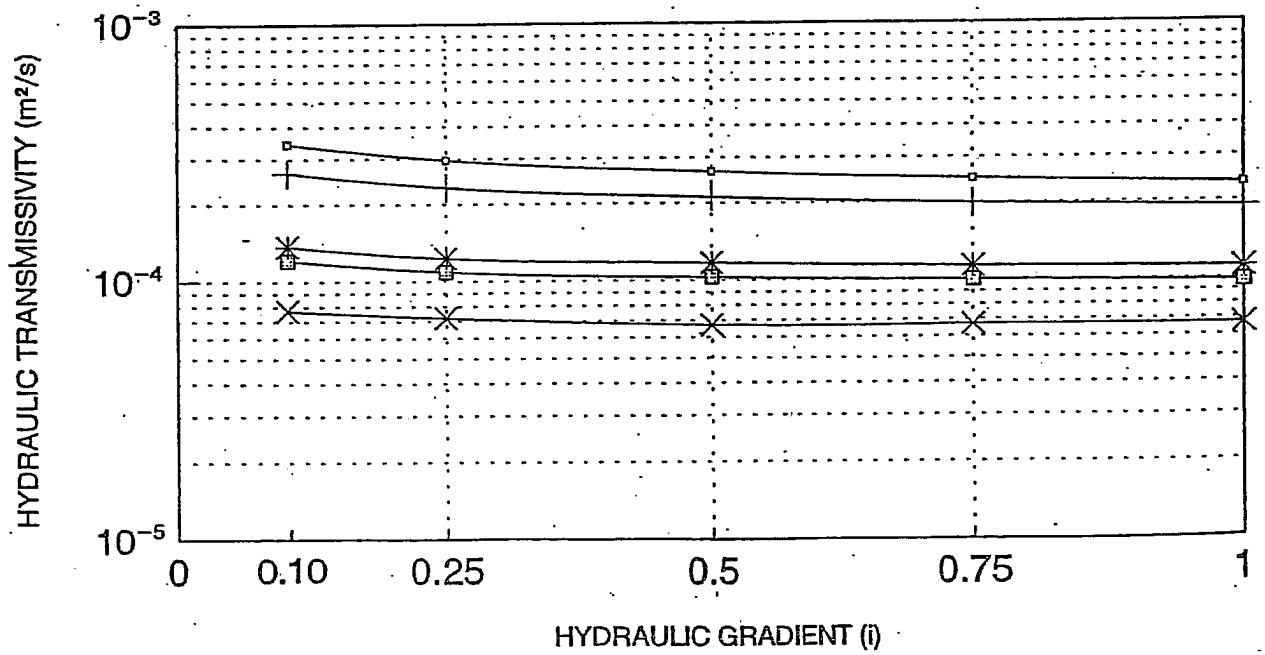

REF 3B
SHEET 17 OF 20

POLY-NET® TRANSMISSIVITY	INSTALLATION METHOD LEAK DETECTION HDPE LINER/POLY-NET/HDPE LINER	HYDRAULIC PRESSURE

PN-3000

- ▼ 1000 PSF
- ■ 2000 PSF
- ○ 4000 PSF
- × 7000 PSF
- ▲ 10000 PSF
- ● 14000 PSF
- □ 20000 PSF

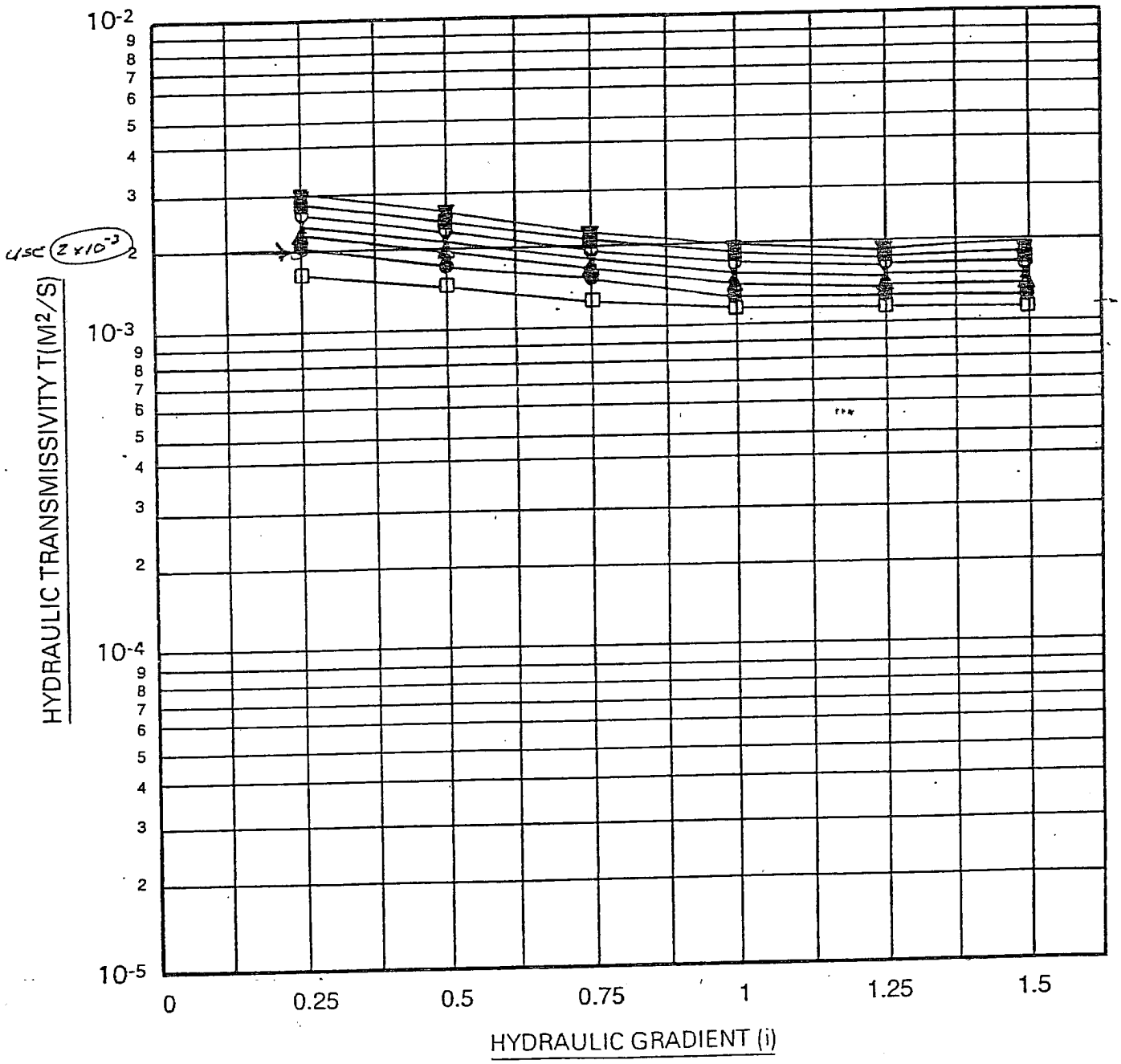

FSI FLUID SYSTEMS, INC.
32 TRIANGLE PARK DRIVE
SUITE 3201
CINCINNATI, OH 45246
513/771-5656
800/346-9107
FAX - 513/771-4844

REPORTS
US EPA
530/R-92-004
1992

REF 4
EPA 530-R-92-004
PB92-128214
SHEET 18 OF 20

ACTION LEAKAGE RATES FOR LEAK DETECTION SYSTEMS

[Supplemental Background Document for
the Final Double Liners and Leak Detection Systems Rule for
Hazardous Waste Landfills, Waste Piles, and Surface Impoundments]

U. S. ENVIRONMENTAL PROTECTION AGENCY
Office of Solid Waste
January 1992

REPRODUCED BY
U.S. DEPARTMENT OF COMMERCE
NATIONAL TECHNICAL
INFORMATION SERVICE
SPRINGFIELD, VA 22161

B_{avg} = average width of the flow in the leak detection system, perpendicular to the flow.

Assumming that the gradient of flow through the hole, at the hole, is sin α and depth of flow at the hole for concentrated flow = the thickness of the drainage layer:

$$B_{avg} = D/\sin \alpha$$

where D = leak detection system thickness.

Then, with D = 1 ft and sin α = 0.01, B_{avg} = 100 ft
0.02, B_{avg} = 50 ft
0.03, B_{avg} = 33 ft.

Using these values for B_{avg} and Equation 1 with $h \approx D = 1$ ft ($h \approx D$ for small values of α), Q in gpad =

k (cm/sec)	sin α	B_{avg} (ft)		
		33	50	100
1	.01	----	----	21,000
	.02	----	21,000	----
	.03	21,000	----	----
.1	.01	----	----	2,100
	.02	----	2,100	----
	.03	2,100	----	----
.01	.01	----	----	210
	.02	----	210	----
	.03	210	----	----

Thus, using the minimum specifications in today's rule: 1% slope, 12 in thick drainage layer, and 1 X 10^{-1} cm/sec hydraulic conductivity for surface impoundments and 1 X 10^{-2} cm/sec hydraulic conductivity for landfills and waste piles, and assuming that the head is 1 ft and the average width of flow (B_{avg}) is as given above, the results show maximum flow rates of 2,100 gpad for surface impoundments and 210 gpad for landfills and waste piles. Using a safety factor of two, as suggested in the example given in the proposed rule preamble, yields about 1,000 gpad for surface impoundments and 100 gpad for landfills and waste piles as the Agency recommended action leakage rates, for units that are designed to the minimum specifications in today's rule. As listed in the rule and above, the safety factor helps account for uncertainties in the design, construction, operation, and location of the drainage layer and potential decreases in flow over time as a result of overburden compressive forces and clogging caused by fines and biological and chemical actions in any leachate that seeps through. Of course, all of the above mechanisms that could result in potential decreases in flow over time should also be considered when selecting the design, especially the hydraulic conductivity of the drainage layer, and in construction. Because this calculation used the

increasing length of run from 20 ft to 80 ft [Table 1; Figure 4 shows that length of run has negligible effect for slopes at or greater than the 1% minimum]; 43% increase when hole size is increased from .25 ft^2 to 1.0 ft^2 but a much less significant increase for holes > 3 ft^2 [Table 2; Figure 5 graphically shows the effect of leak size on flow rates]). However, the effect of these three variables is relatively insignificant compared to hydraulic conductivity, head, and drainage layer thickness (e.g., ten times increase (900%) when increased from .01 cm/sec to .1 cm/sec hydraulic conductivity [Tables 1, 3-5]; 382% increase when increased from no head to 2 ft head above the top liner, e.g., in a 2 ft deep surface impoundment [Table 3]; and 210% increase when geonet thickness is doubled from 5 mm to 10 mm [Table 5]).

Figures 2a-2d (side view) and 3a-b (top view) show the shape of the saturated zone for various designs, assuming no head above the top liner. These show only small portions of the bottom liner are actually exposed to the 1 ft head (as assumed in the simpler models discussed above). Figures 6-8b, however, show that as the head increases, so does the area of the bottom liner exposed to the greater heads. The graph for 8 ft head for surface impoundments is almost rectangular and therefore is not shown. Table 5 and Figure 10 show the results for geonets, which because of their high hydraulic conductivities have high flow rates.

Table 4 shows flow rates of 204 gpad and 2,040 gpad respectively for the landfill and surface impoundment specifications (i.e., 1% slope and hydraulic conductivity of 10^{-1} cm/sec for surface impoundments and 10^{-1} cm/sec for landfills, but with 1 ft of head above the top liner, 180 ft length of run, and a .1 ft^2 hole size). Comparing the results of the 3-D model to those of Equations 1 and 3, using the 1% slope and 10^{-1} cm/sec hydraulic conductivity for surface impoundments, shows that if the hole size is somewhat less than .25 ft^2, the flow rate with a 2 ft head would be about 2100 gpad [Table 3]. For 0 ft head above the top liner, the hole would be somewhat larger than 30 ft^2, or close to uniform flow [Figure 5].

3.2 Alternative Action Leakage Rates

While EPA recommends the above action leakage rates (100 and 1,000 gpad) for units that are built to the minimum design specifications, the Agency recognizes that a number of site-specific factors affect the maximum flow capacity of a leak detection system, and owners and operators may want to propose alternative action leakage rates. For example, the leak detection system design may be different than the minimums specified in the final rule. As indicated above, the hydraulic conductivity is a factor that significantly affects the flow capacity of the system. Since they are directly proportional, a ten times increase in hydraulic conductivity (i.e., from 10^{-2} to 10^{-1} cm/sec) increases the flow capacity ten times. Therefore, EPA believes that leak detection systems with greater hydraulic conductivities would have higher action leakage rates. In addition, owners or operators may have information to justify a

REFERENCE

KOERNER 1998

Fourth Edition

Designing with Geosynthetics

Robert M. Koerner, Ph.D., P.E.

H. L. Bowman Professor of Civil Engineering,
Drexel University and Director, Geosynthetic
Research Institute

PRENTICE HALL
Upper Saddle River, New Jersey 07458

TABLE 8.4 ESTIMATES OF REQUIRED FLOW RATES (DISCHARGE) FOR WICK DRAINS

Source	Required Flow Rate* (l/min)	Normal Stress (kPa)	Hydraulic Gradient
den Hoedt [31]	0.17	—	—
Kremer et al. [32]	0.30	100	0.62
Kremer et al. [32]	0.09†	—	—
Kremer et al. [33]	1.51	15	1.00
Holtz et al. [34]	0.23	400	—
Koerner et al. [35]	0.10	in situ	1.00
Rixner et al. [28]	0.19	in situ	1.00
Holtz and Christopher [36]	0.95	in situ	1.00
Bergado et al. [37]	0.76	in situ	1.00
	0.47†	in situ	1.00

*Note, in the literature many authors use the unit of m^3/yr for the required rate. 1.0 l/min = 526 m^3/yr

†In flattened S-configuration, i.e., in deformed state.

RF_{BC} = reduction factor for biological clogging of the geotextile or within the drainage core space.

A guide for typical values in Eq. (8.10) is presented as Table 8.5 (compare this with Table 4.2 for geonets). Note, however, that wick drains are temporary construction expedients, thus the chemical and biological clogging potential is probably quite low. Creep is dependent on the time the strip drains are required and the normal stress arising from the depth within the soil to be consolidated. For intrusion RF_{IN}, ASTM D4716 can be evaluated with soil above and below the wick drains. In this case, the intrusion reduction factor would be included as a value of unity. Now, having an in situ modified value of q_{allow}, a traditional design-by-function can be performed. See Example 8.4.

TABLE 8.5 RECOMMENDED REDUCTION FACTORS FOR EQ. (8.10) TO DETERMINE ALLOWABLE FLOW RATE OF DRAINAGE GEOCOMPOSITES (WICK DRAINS, SHEET DRAINS AND EDGE DRAINS)

Application Area	RF_{IN}	RF_{CR}^{*}	RF_{CC}	RF_{BC}
Sport fields	1.0 to 1.2	1.0 to 1.2	1.0 to 1.2	1.1 to 1.3
Capillary breaks	1.1 to 1.3	1.0 to 1.2	1.1 to 1.5	1.1 to 1.3
Roof and plaza decks	1.2 to 1.4	1.0 to 1.2	1.0 to 1.2	1.1 to 1.3
Retaining walls, seeping rock and soil slopes	1.3 to 1.5	1.2 to 1.4	1.1 to 1.5	1.0 to 1.5
Drainage blankets	1.3 to 1.5	1.2 to 1.4	1.0 to 1.2	1.0 to 1.2
Surface water drains for landfill caps	1.3 to 1.5	1.2 to 1.4	1.0 to 1.2	1.2 to 1.5
Secondary leachate collection (landfill)	1.5 to 2.0	1.4 to 2.0	1.5 to 2.0	1.5 to 2.0
Primary leachate collection (landfill)	1.5 to 2.0	1.4 to 2.0	1.5 to 2.0	1.5 to 10
Wick drains†	1.5 to 2.5	1.0 to 2.5	1.0 to 1.2	1.0 to 1.2
Highway edge drains	1.2 to 1.8	1.5 to 3.0	1.1 to 5.0	1.0 to 1.2

*These values assume that the ultimate value was obtained using an applied normal pressure of approximately 1.5 times the field anticipated maximum value. If not, the values must be increased.

†An additional term for kinking should be included, where RF_{KG} = 1.0 to 4.0.

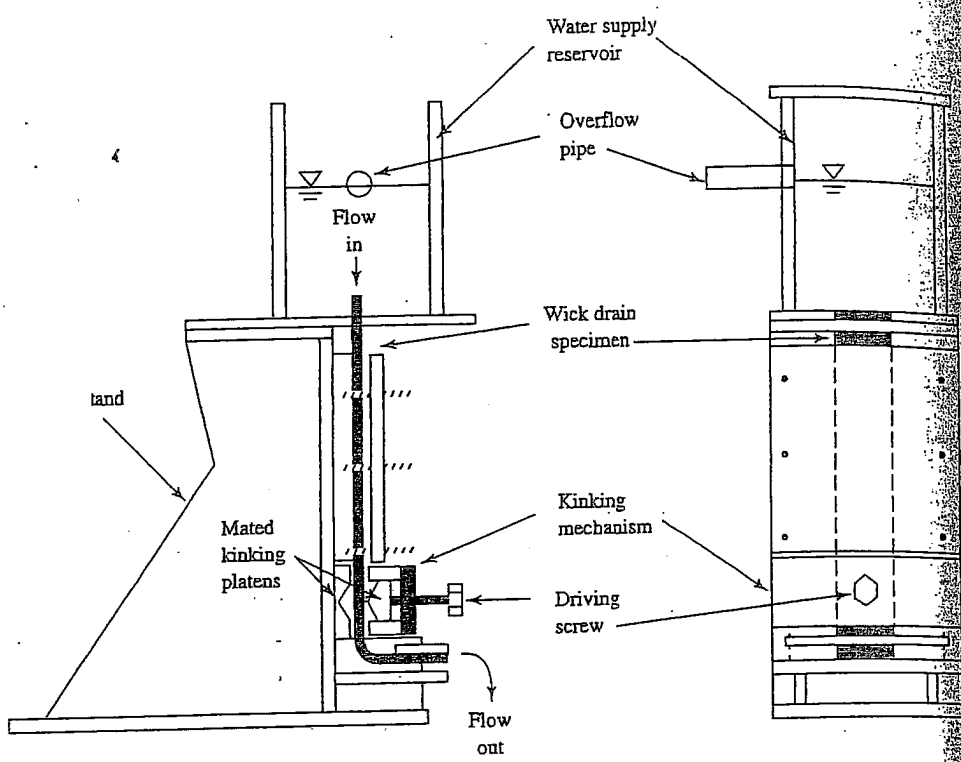

Figure 8.12 Side and front views of laboratory kinking test device.

For the allowable flow rate q_{allow} the ultimate flow rate from a ASTM D4716 test method should be obtained (recall Section 4.1.3). Typical values of ultimate flow rate at a hydraulic gradient of 1.0 under 200 kPa normal stress vary from 2.5 to 5.0 l/min for a 100 mm wide wick drain. This value must then be reduced on the basis of site specific reduction factors,

$$q_{allow} = q_{ult}\left[\frac{1}{RF_{IN} \times RF_{CR} \times RF_{CC} \times RF_{BC}}\right] \tag{8.10}$$

where

q_{allow} = allowable flow rate to be used in design,
q_{ult} = ultimate flow rate (as determined from ASTM D4716) for short-term tests,
RF_{IN} = reduction factor for elastic deformation of the adjacent geotextile intruding into the drainage core space,
RF_{CR} = reduction factor for creep deformation of the drainage core itself and/or intrusion of the adjacent geotextile into the drainage core space,
RF_{CC} = reduction factor for chemical clogging and/or precipitation of chemicals onto the geotextile or within the drainage core space, and

AquAeTer

optimizing environmental resources - water; air; earth

CALCULATION SUMMARY SHEET

PROJECT NUMBER: 073113

PROJECT NAME: USEN – Trench 12 Design, Supplemental Calculations

DATE: September 18, 2007

CALCULATION NUMBER: _____ Revision: Permit Requirement

CALCULATION TITLE: Hydraulic Conductivity of Sump Gravel

DESCRIPTION OF CALCULATION:

Calculation to re-evaluate the hydraulic conductivity of proposed sump gravel in the LCRS and LDS.

REFERENCES USED: Number of Reference Pages Attached: _____

1. Foundations Analysis and Design by Bowles
2. Groundwater by Freeze and Cherry

REVIEW COMMENTS:

CALCULATION MADE BY: SLW DATE: 9/18/2007

CALCULATION CHECKED BY: CAB DATE: 9/18/2007

CALCULATION REVISED BY: _____ DATE: _____

CALCULATION REVIEWED BY: SLW DATE: 9/18/2007

Purpose of Calculation

Compliance Schedule item 7.12.8 asks that USEN specify the gravel to be used in leachate sumps to obtain a "transmissivity" of 10 cm/sec. A calculation identifying the gravel "permeability" as 10 cm/sec was previously accepted by NDEP. That gravel permeability is a conservative, mid-range textbook value considered typical for coarse-grained gravel and was used as a typical value in the prior calculation.

Recent materials tests have determined that a permeability between 1.7 and 2.1 cm/sec can be achieved using screened gravel from the Trench 12 excavation. This also is a conservative value and is adequate to handle leachate flow in the LCRS and LDS systems. This calculation is done in the same manner as the 1996 calculation that supported the previous gravel permeability specification. The revised calculation shows that a minimum gravel permeability specification of 1 cm/sec or higher is sufficient in the design application (LCRS collectors and sump).

Method

Use Darcy's equation to determine flow the flow capacity of the gravel.

Analysis

Darcy's equation = Q = k*i*A*n
Where:
Q = Flow capacity
k = hydraulic conductivity of the gravel = 2.1 cm/sec = 4.1 ft/min
i = slope = 10%
A = cross sectional area of the sump surrounding the LCRS((14'+7'+7.5')*1' = 28.5 ft^2 (see attached Figure 1)
n = porosity = 30%

Q = (4.1 ft/min)*(0.10)*(28.5 ft^2)*(0.30) = 3.5 ft^3/min = 26 gallons/min

As calculated in the LCRS Flow Capacity and Pump Sizing calculation revision, the flow through the LCRS could be as high as 8.6 gallons per minute. Running the calculation in reverse and using Q set at 8.6 gallons per minute (or 1.2 ft^3/min), and solving for k yields the following:

1.2 ft^3/min = (k)*(0.10)*(28.5 ft^2)*(0.30)

Solving for k;

k = 1.4 ft/min or 0.71 cm/sec

Results

As calculated in the LCRS Flow Capacity and Pump Sizing calculation revision, the flow through the LCRS could be as high as 8.6 gallons per minute. Based on the assessment above, gravel with a hydraulic conductivity of 0.71 cm/sec or higher is sufficient and will not produce backups of leachate on the liner. The hydraulic conductivity of screened gravel from the US Ecology site had a hydraulic conductivity of 1.7 to 2.1 cm/sec and is sufficient for use in the sumps.

Figure 1. Typical Sump Layout

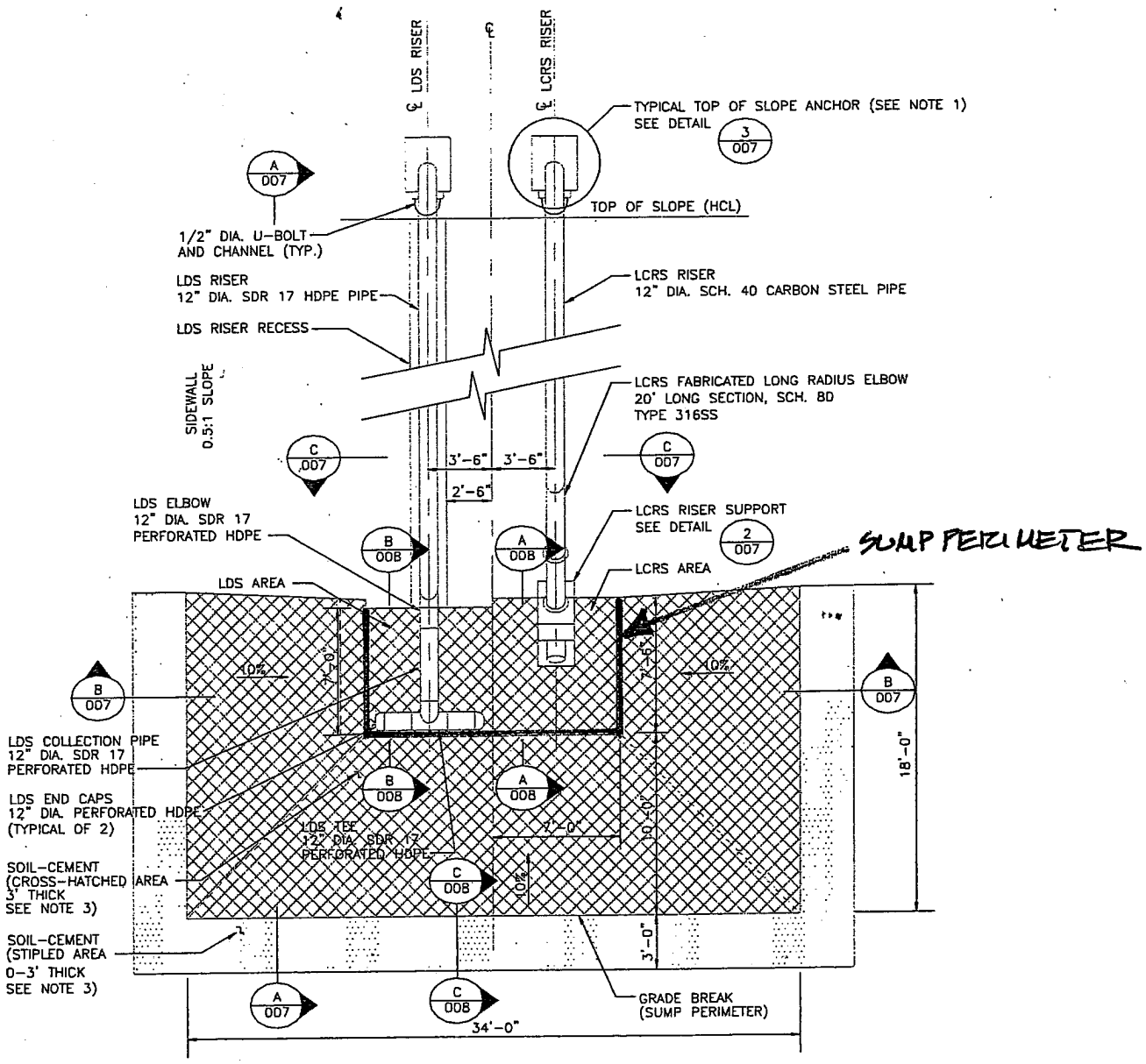

AquAeTer

optimizing environmental resources - water; air; earth

Project Number: 073113 Sheet No. 5 of 5

Project Name: BEATTY SUMP GRAVEL

Prepared by: SLW Date: 9/18/07

Checked by: CAB Date: 9/18/07

Title:

TYPICAL SUMP GRAVEL AT LCRS COLLECTION POINT

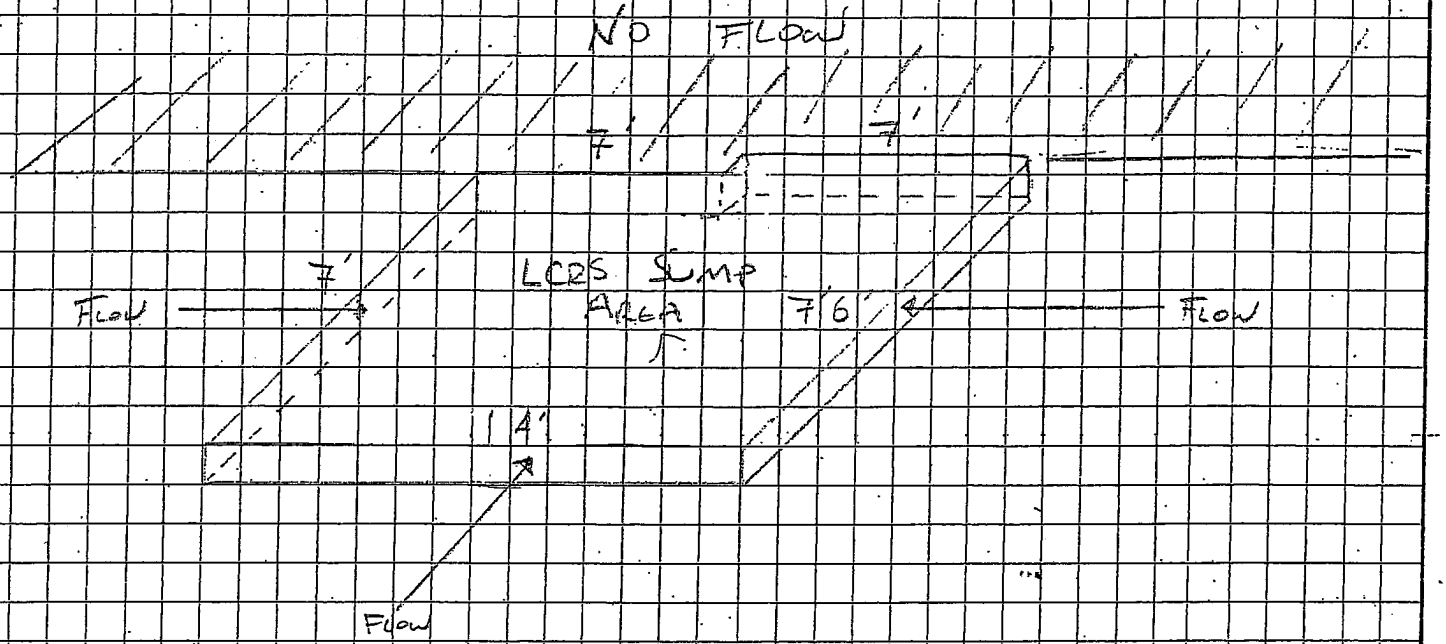

References

FOUNDATION ANALYSIS AND DESIGN

Second Edition

Joseph E. Bowles

Professor of Civil Engineering
Bradley University

McGRAW-HILL BOOK COMPANY
New York St. Louis San Francisco Auckland Bogotá Düsseldorf
Johannesburg London Madrid Mexico Montreal New Delhi
Panama Paris São Paulo Singapore Sydney Tokyo Toronto

Table 2-6. Order of magnitude values for permeability k, based on description of soil and by Unified Classification, cm/sec

10^2	10^0	10^{-3}	10^{-7}	10^{-9}
Clean gravel GW, GP	Clean gravel and sand mixtures GW, GP SW, SP GM	Sand-silt mixtures SM, SL, SC	Clays	

Permeability

Flow of soil water, for nonturbulent conditions, has been expressed by Darcy as

$$v = ki \tag{2-37}$$

where i = hydraulic gradient h/L, as previously defined
k = coefficient of permeability as proposed by Darcy, length/time. Table 2-6 lists typical order-of-magnitude values for various soils.

The quantity of flow q is

$$q = kiA \qquad \text{volume/time}$$

Two tests commonly used in the laboratory to determine k are the *constant-head* and *falling-head* methods. See Fig. 2-15 for a schematic diagram of each and the significance of the terms used.

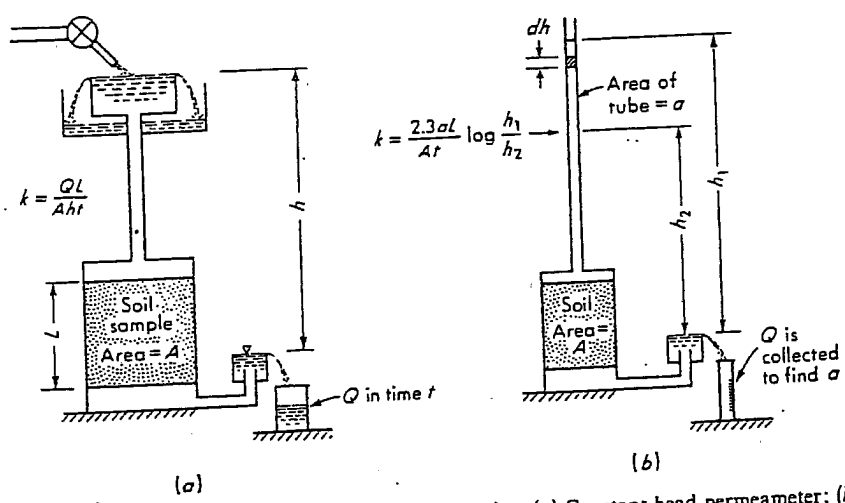

Figure 2-15. Schematic for permeability determination. (*a*) Constant-head permeameter; (*b*) falling-head permeameter.

R. Allan Freeze

Department of Geological Sciences
University of British Columbia
Vancouver, British Columbia

John A. Cherry

Department of Earth Sciences
University of Waterloo
Waterloo, Ontario

GROUNDWATER

PRENTICE HALL, Englewood Cliffs, NJ 07632

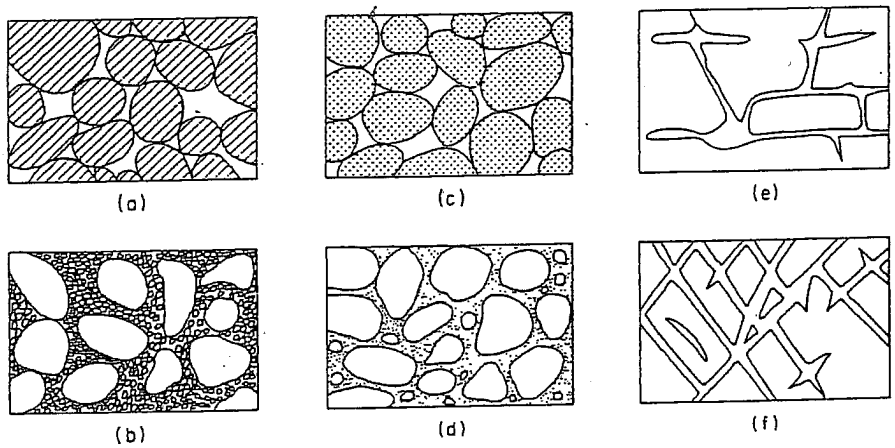

Figure 2.11 Relation between texture and porosity. (a) Well-sorted sedimentary deposit having high porosity; (b) poorly sorted sedimentary deposit having low porosity; (c) well-sorted sedimentary deposit consisting of pebbles that are themselves porous, so that the deposit as a whole has a very high porosity; (d) well-sorted sedimentary deposit whose porosity has been diminished by the deposition of mineral matter in the interstices; (e) rock rendered porous by solution; (f) rock rendered porous by fracturing (after Meinzer, 1923).

soil or rock matrix [Figure 2.11(a), (b), (c), and (d)], and *secondary porosity*, which may be due to such phenomena as secondary solution [Figure 2.11(e)] or structurally controlled regional fracturing [Figure 2.11(f)].

Table 2.4, based in part on data summarized by Davis (1969), lists representative porosity ranges for various geologic materials. In general, rocks have lower porosities than soils; gravels, sands, and silts, which are made up of angular and

Table 2.4 Range of Values of Porosity

	n(%)
Unconsolidated deposits	
Gravel	25–40 USE 30%
Sand	25–50
Silt	35–50
Clay	40–70
Rocks	
Fractured basalt	5–50
Karst limestone	5–50
Sandstone	5–30
Limestone, dolomite	0–20
Shale	0–10
Fractured crystalline rock	0–10
Dense crystalline rock	0–5

REFERENCE

LCRS FLOW CALCULATION RESULTS

Results

The effective flow of the LCRS geocomposite is 0.00921 gal/ft-min. Since infiltration could be as high as 8.6 gallons per minute, a sump with a perimeter of 930 feet would be needed to prevent backups from occurring. Since the sump has a perimeter of only 70 feet, backups could occur; therefore, 3" piping spaced at 100 feet will be used in the LCRS design. Maximum leachate head on the liner could be as much as 0.013 feet in cell 12C; however, this is less than the 1.0 foot maximum required in the permit therefore 100 feet lateral drainage piping and the selected geocomposite are acceptable.

Since flow through the LCRS system could be as high as 8.6 gallons per minute and assuming a safety factor or 4, an EPG Vertical Sump Drainer Model 12-5 at 3.0 HP was selected as the pump for the LCRS.

REFERENCE

SOIL TEST PERMEABILITY

Knight Piésold CONSULTING

Constant Head Permeability

USBR 5605, Amended

Project	U.S. Ecology-NV Misc. Testing Proj.#07-3113	Project No.	07.1243
Lab No.		Date of Test	08/20/07
Sample No.	07-0605E	Tested By	spb
Location	Native, USEN-B1	Checked By	SPB

Specimen Data

Target Dry Density, pcf	NA	Wet Sample Wt. + Tare, lbs.	38.158
Target Density, t/m^3	NA	Tare, lbs.	15.920
Moisture Content, %	NA	Wet Sample Wt., lbs.	22.238
Mold Diameter, in.	8.02	Sample Length, in.	8.701
Mold Area, in.^{2}	50.52	Sample Volume, in.^{3}	439.5
Mold Area, ft^2	0.3508	Sample Volume, ft^3	0.2544
Depth to Mold Bottom, in.	8.701	Wet Density, pcf	87.4
		Initial Depth to Plate, in.	0.000
Normal Stress Range, psf	144		

Permeability Trial Data

Normal Stress, psf	144			Head, cm	1.2
Avg. Depth to Plate, in.	0.070	Consolidated Length, in.	8.631	Wet Density, pcf	88.1

Trial No.	Q cc	Time sec	Flow cc/sec	Permeability k, cm/sec
1	453	11.87	38.2	2.1E+00
2	453	12.13	37.3	2.1E+00
3	453	12.18	37.2	2.1E+00
4	453	11.88	38.1	2.1E+00
5	453	12.04	37.6	2.1E+00
6	453	12.08	37.5	2.1E+00
7	453	12.00	37.8	2.1E+00
Averages			37.672	2.1E+00

General Notes:

1) Tap water was used as permeant.
2) Flow conditions may vary depending on the particle distribution in the field.
3) The sample was allowed to saturate overnight prior to initializing flow trials.
4) The sample was prepared by placing the material in the mold loosely and then lightly tapping the sides of the mold.

ATTACHMENT 4

CONSTRUCTION QUALITY ASSURANCE PLAN FOR TRENCH 12