Appendix B-14

Response Action Plan, Leak Detection System Trench 12

RESPONSE ACTION PLAN

LEAK DETECTION SYSTEM

TRENCH 12

US ECOLOGY NEVADA

OCTOBER 2009

Revised May 2011

RESPONSE ACTION PLAN
TRENCH 12
TABLE OF CONTENTS

1. Introduction 1
2. Leachate Collection and Removal System 1
3. Leak Detection System 1
4. Action Leakage Rate 2
5. Sump Monitoring 3
6. Determining When the ALR Is Exceeded and Response Actions 3
7. Leachate Management 5

Table 1 ALR Determination
Figure 1 Typical Sump Layout

Appendix A ALR Calculations
Appendix B Pump Specification Sheet

RESPONSE ACTION PLAN

TRENCH 12

1. Introduction

The U.S. Environmental Protection Agency (USEPA) promulgated rules on January 29, 1992, requiring Response Action Plans (RAP) for new hazardous waste landfill units which commence construction after January 29, 1992, or which expand existing units after July 29, 1992 (57 FR 3462). At the US Ecology Nevada (USEN) Facility, Trench 12 is a new hazardous waste landfill unit that is regulated under this rule. This RAP meets the requirements of 40 CFR §264.304 and identifies actions to be taken if an action leakage rate has been exceeded.

2. Leachate Collection and Removal System

The primary leachate collection and removal system (LCRS) minimizes the possibility of leachate migrating through the primary liner into the underlying Leak Detection System (LDS). The primary LCRS in Trench 12 consists of a double-sided geocomposite (GSE Fabrinet 300-mil geonet sandwiched between two 8 ounce/yd^2 geotextiles) and an underlying 80-mil HDPE flexible membrane liner. (See Appendix A, Figure 1.)

Upon completion of all phases of construction, three (3) sumps will collect liquids draining from discrete portions of the Trench 12 cell floor and sidewalls. At the time of submittal, phase I construction is completed and one detection sump and one collection sump have been constructed in Trench 12. 40 CFR §264.301(c)(2) requires the facility to collect and remove leachate from the landfill during the active life and post-closure care period. Pumps located within a perforated riser pipe in the LCRS are used to remove liquids at each sump. USEN monitors LCRS sumps weekly and removes accumulating leachate to ensure that the head on the primary liner does not exceed 1.0 foot.

3. Leak Detection System (LDS)

The Trench 12 LDS consists of a double-side geocomposite (GSE Fabrinet 300-mil geonet sandwiched between two 8 ounce/yd^2 geotextiles) and a 60-mil underlying HDPE flexible membrane liner atop a geosynthetic clay liner. Upon completion of all phases of construction, three (3) sumps will be installed in the LDS to collect liquids draining from discrete portions of the leak detection layer in the Trench 12 cell floor and sidewalls. 40 CFR §264.301(c)(4) requires the facility to collect and remove pumpable liquids found in the LDS sumps to minimize the head on the bottom liner. "Pumpable liquids" are defined in this plan as liquid that can be reasonably pumped out of the sump based on sump dimensions and pump operating levels for automated pump systems.

Pumps located within a perforated riser pipe in the LDS are used to remove pumpable liquids at each sump. USEN monitors LDS sumps weekly and removes pumpable liquids.

Figure 1 shows the basic configuration of Trench 12 LDS/LCRS Sumps, and identifies the limits of the Sumps and the limits of the Trench Bottom Liner. The vertical distance from the bottom of the LDS Sumps to the lowest point of the trench bottom liner is approximately 2.25 feet. Figure 1 also shows a schematic of 1.0 foot of leachate on the Trench Bottom Liner. The LDS Pump will be positioned in each LDS Sump such that the base of the pump is approximately 2.25 feet below the lowest point of the trench bottom liner. The selected LDS pump type will not operate (i.e., cannot pump liquid) if there is less than 0.6 feet of fluid above the base of the pump. The operating controls for LDS Pumps will be set so that pumping will begin when the fluid level above the base of the pump is approximately 2.0 feet. At this fluid level, the fluid being pumped will be fully contained with the limits of the LDS/LCRS Sumps. The LDS Pump capacity as established in this RAP and fluid head levels equivalent to 1.0 feet of head above the lowest point of the trench bottom liner should never be exceeded.

4. Action Leakage Rate

The Action Leakage Rate (ALR) is the maximum design flow rate that the leak detection system (LDS) can remove without the fluid level on the bottom liner exceeding one (1) foot. This plan establishes an ALR for each of the three LDS sumps in Trench 12. (See Appendix A.)

The ALR for each sump is based on an approach similar to the USEPA-proposed definition for "rapid and extremely large leakage rate" as provided in the January 29, 1992 rule. In this plan, the ALR is based on the maximum flow that the LDS can deliver to the sumps as shown in Table 1.

Table 1. ALR Determination

Sump	Total Flow* (gal/day)	Pump Capacity** (gal/day)	Sump Area (acres)	ALR*** (gal/acre/day)
12A	910	2,160	4.45	204
12B	910	2,160	3.45	147
12C	910	2,160	3.26	279

* Inflow capacity of geocomposite component of LDS system.

** Maximum capacity of the IH125 pump at 80 feet is 1.5 gal/min.

*** The ALR is calculated based on the collection flow capacity of the LDS sump.

5. Sump Monitoring

All leachate sumps (LCRS and LDS) in Trench 12 are monitored weekly. The results of this monitoring (depth of leachate in the sump, volume of leachate removed if pumping is required, and pumping time) are recorded in the sump monitoring log maintained for each sump.

If liquid is detected in an LDS sump above the pump operating level, the sump will be pumped within 24 hours to remove pumpable liquids. If liquid is detected in an LCRS sump with a depth of 1.75 feet or greater in the LCRS riser, the sump will be pumped within 24 hours to remove pumpable liquids.

During the post-closure period, after the final cover is installed, leachate collection sumps and leak detection sumps will be monitored monthly.

Figure 1 Typical Sump Layout

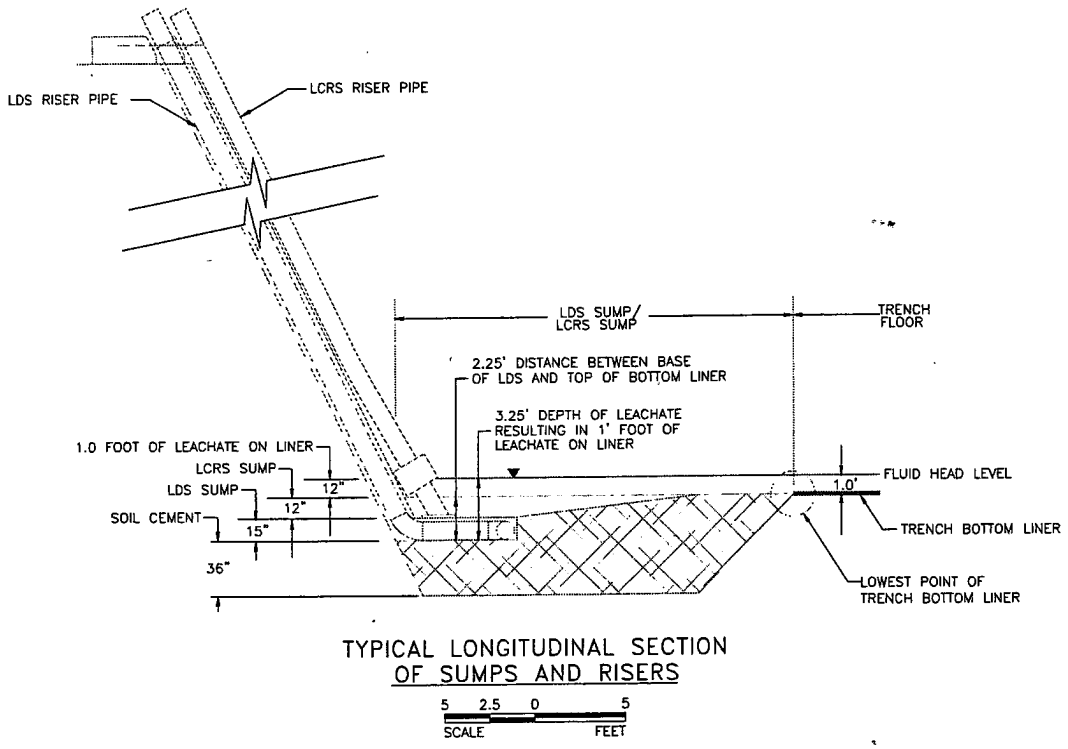

6. Determining When the ALR Is Exceeded and Response Actions

If the volume of liquid pumped from any LDS sump exceeds 910 gal/day, facility personnel will report this information to the Facility Manager.[1]

[1] All references to the Facility Manager will include his/her designee and are herein-after referred to collectively as the "Facility Manager."

The Facility Manager will institute daily monitoring for five working days to determine whether average removal volumes indicate that practical daily total flow limits are being exceeded for an individual sump. Five-day average flow rates will then be used to calculate Action Leakage Rates to determine whether ALR values in Table 1 are being exceeded.

If the Facility Manager determines that the flow rate into the LDS exceeds the ALR for an individual sump, the Facility Manager will follow the steps outlined below:

1. Notify NDEP and EPA Region IX in writing within seven (7) days of determining that the ALR has been exceeded.

2. Submit a preliminary written assessment to NDEP within 14 days of the determination. This report will document the amount of liquids removed from the leak detection sump; likely sources of the liquids; possible location, size and cause of any leaks; and short-term actions taken and planned.

3. Assess the source or liquids and amounts of the liquids by source.

4. Conduct a fingerprint, hazardous constituent or other analysis to identify the sources of liquids and possible locations of any leaks, and the hazard and mobility of the liquid.

5. Assess the seriousness of the leak in terms of potential for escaping into the environment.

6. Determine, to the extent practicable, the location, size, and cause of any leak.

7. Determine whether waste receipt should cease or be curtailed; whether any waste should be removed from the unit for inspection, repairs, or controls; and whether or not the unit should be closed.

8. Determine if any other short-term and long-term actions need to be taken to mitigate or stop any leaks.

9. Within 30 days after the initial notification to NDEP that the action leakage rate has been exceeded, submit a report to NDEP containing the information and determinations specified in items 3 through 8 above.

10. Thereafter, submit monthly reports to NDEP as long as the flow rate in the leak detection systems exceeds the action leakage rate summarizing the results of any remedial actions taken and actions planned.

7. Leachate Management

Leachate generated from leachate collection systems (LDS and LCRS) in Trench 12 will be used for dust control within the lined cell (from which the leachate originated). During early operations in Trench 12, there will be less opportunity to use collected liquids from leachate collection systems for dust control when there is little waste disposed in Trench 12. Excess liquids, not used for dust control and removed from the active cell will require appropriate disposal as a hazardous liquid. The appropriate disposal of the hazardous liquid will need to be accomplished within appropriate time limitations.

Appendix A

ALR Calculations

AquAeTer *optimizing environmental resources - water; air; earth*

CALCULATION SUMMARY SHEET

PROJECT NUMBER: 073133.05

PROJECT NAME: USEN – Trench 12 Response Action Plan

DATE: May 20, 2008

CALCULATION NUMBER: _____ Revision: 0

CALCULATION TITLE: ALR Calculation

DESCRIPTION OF CALCULATION:

Calculation to determine Action Leakage Rate in the LDS

REFERENCES USED: Number of Reference Pages Attached: _____

1. GSE Geotextile Information
2. Designing with Geosynthetics, Koerner, 1998
3. Calculation in 10/8/2007 Supplement to Landfill Report for Trench 12 Attachment 3, "LDS Flow Capacity and Pump Sizing"

REVIEW COMMENTS:

CALCULATION MADE BY: CAB DATE: 5/20/2008

CALCULATION CHECKED BY: SLW DATE: 6/18/2008

CALCULATION REVISED BY: CAB DATE: 6/18/2008

CALCULATION REVIEWED BY: SLW DATE: 6/18/2008

Purpose of Calculation

Evaluation of the ability of the leak detection system (LDS) for Trench 12 to transmit flow and evaluation of the action leakage rate (ALR). The evaluation of ALR is required in the Response Action Plan (RAP). For this calculation the conservative assumption is made that the primary liner system leaks and pumping of the LDS is required.

Method

- The LDS flow to a typical Trench 12 sump was calculated.
- The ALR for Trench 12 LDS sumps was calculated

Analysis

Applicable Regulations

The regulatory definition of the ALR is, "the maximum design flow rate the LDS can remove without the fluid head on the bottom liner exceeding one foot." The ALR must include an adequate safety margin to allow for uncertainties in the design (e.g., slope, hydraulic conductivity, thickness of drainage material), construction, operation, and location of the LDS, waste and leachate characteristics, likelihood and amounts of other sources of liquids in the LDS, and proposed response actions. The ALR must consider decreases in the flow capacity of the system over time resulting from siltation and clogging, rib layover and creep of synthetic components of the system, overburden pressures, etc.

Geometry

The typical bottom liner is shown below. Both the LCRS and LDS double-sided geocomposites are have a 300-mil geonet component.

Figure 1. Typical Trench Bottom Configuration

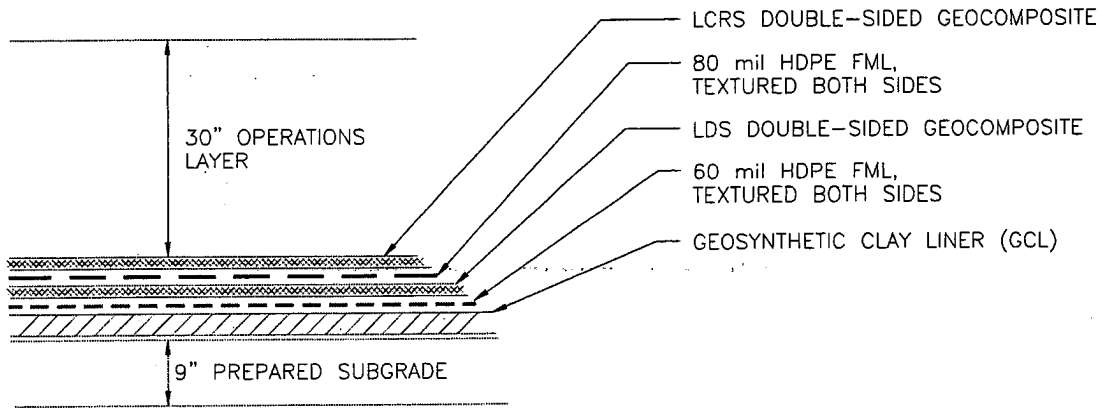

There are three sumps in the Trench 12 design. The typical geometry is shown below.

Figure 2. Typical Sump Layout

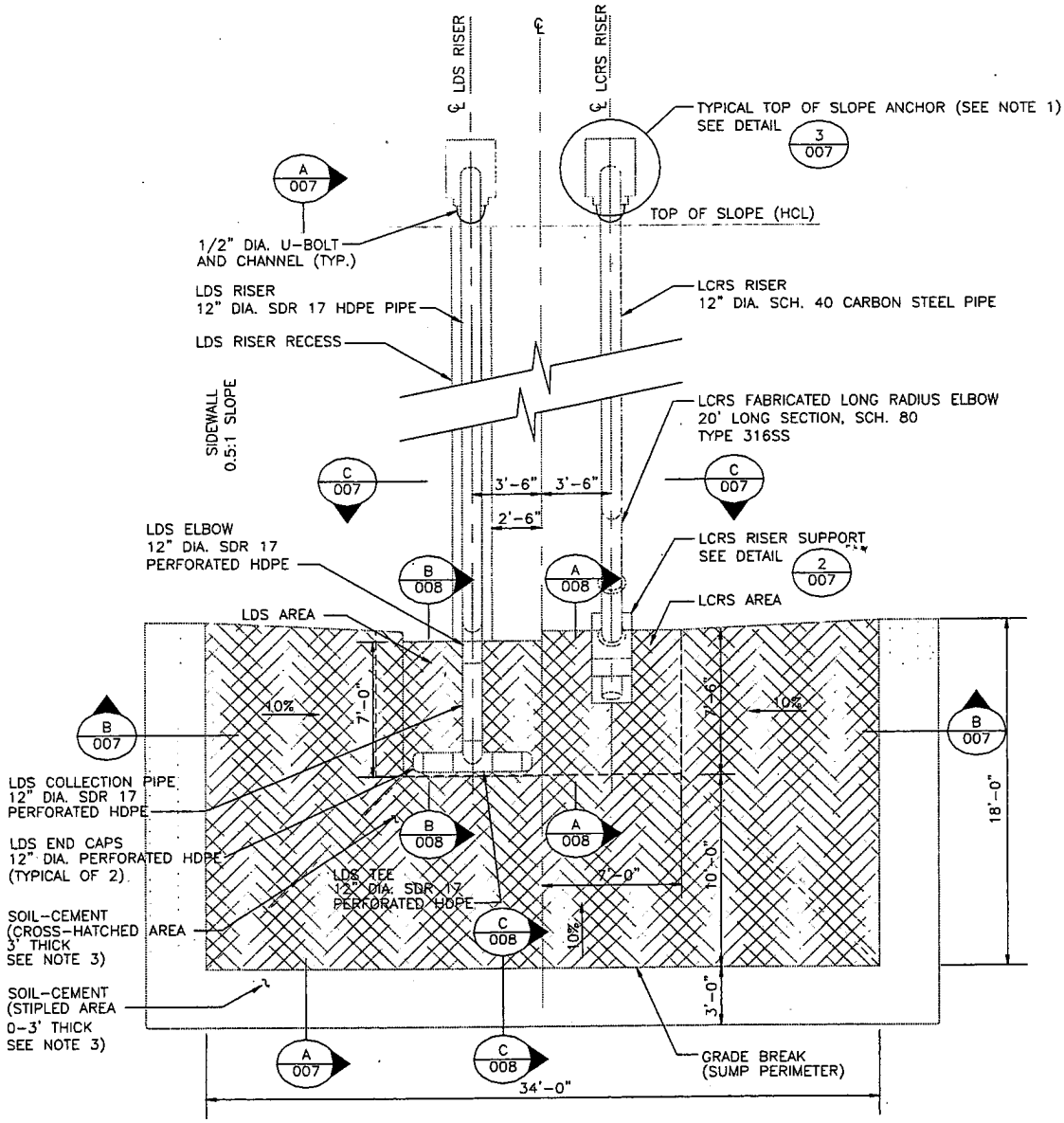

Flow Capacities

The following flow elements are used in the LDS.

- Double sided geocomposite (GSE Fabrinet 300-mil geonet sandwiched between two 8 ounce/yd^2 geotextiles).

- Gravel (screened site materials with at least 95% falling within the size range between 1.0 and 3.0 inches and not more than 5% passing the #4 sieve) used in the sump only.

The double sided geocomposite is used in the slope liner LDS as well as in the bottom liner as shown in Figure 1. Therefore, flow within in the LDS will be controlled by the minimum bottom slope.

Flow within the geocomposite is calculated using Darcy's Equation (which assumes laminar flow within the net).

$$q = \Theta_{eff} * i$$

Where

q = flow per unit width

Θ_{eff} = effective transmissivity

i = hydraulic gradient

Effective transmissivity for the geocomposite is calculated by applying several safety factors to the published transmissivity value. The following formula is used for that calculation.

$$\Theta_{eff} = \frac{\Theta}{(FS_{CR} \times FS_{IN} \times FS_{CC} \times FS_{BC})}$$ Where:

FS_{CR} = the factor of safety for creep deformation of the drainage core itself and/or intrusion of the adjacent geotextile into the drainage core space

FS_{IN} = the factor of safety for elastic deformation of the adjacent geotextile intruding into the drainage core space

FS_{CC} = the factor of safety for chemical clogging and/or precipitation of chemicals onto the geotextile or within the drainage core space

FS_{BC} = the factor of safety for biological clogging of the geotextile or within the drainage core space

The following table shows the unit flow capacity for the 300-mil trench bottom geocomposite based on the applicable transmissivity, or hydraulic conductivities, hydraulic gradients, and safety factors.

Flow Element	Θ	FS_{CR}	FS_{IN}	FS_{CC}	FS_{BC}	Θ_{eff}	i	q	q
Units	gal/min /ft	NA	NA	NA	NA	gal/min /ft	NA	gal/min/ft	gal/day/ft
GSE Fabrinet UF 8 ounce/yd^2	4.35	1.4	1.5	1.5	1.5	0.92	**0.01**	0.0092	13
GSE Fabrinet UF	4.35	1.4	1.5	1.5	1.5	0.92	**0.1**	0.0921	133

8 ounce/yd^2									

Transmissivity values are provided by the manufacturer as included in the references. Safety factors are taken from the literature (Koerner 1998). Flow capacities are shown at hydraulic gradients of 1 percent and 10 percent for the nominal cell bottom slope and the minimum sump slope, respectively. Since the gravel is used only within the sump boundaries around the riser pipes, flow capacities are calculated for the geocomposite only.

Controlling Section

Preferential flow for the cell floor is to the LDS sumps of each Phase (12A, 12B, and 12C). Because flow is transmitted tot the sump from across the entire cell floor, the sump perimeter was determined to be the limiting factor in transmitting flow to the sump for removal. The maximum flow that the system can remove is determined by the maximum flow that can be transmitted at the sump perimeter and removed through the riser pipe and pump. At the maximum flow rate that the system can deliver, converted to an ALR, the geocomposite will flow full, or partially full, and fluid head will not increase (mound) with time.

Figure 3. Typical Sump (Longitudinal Section)

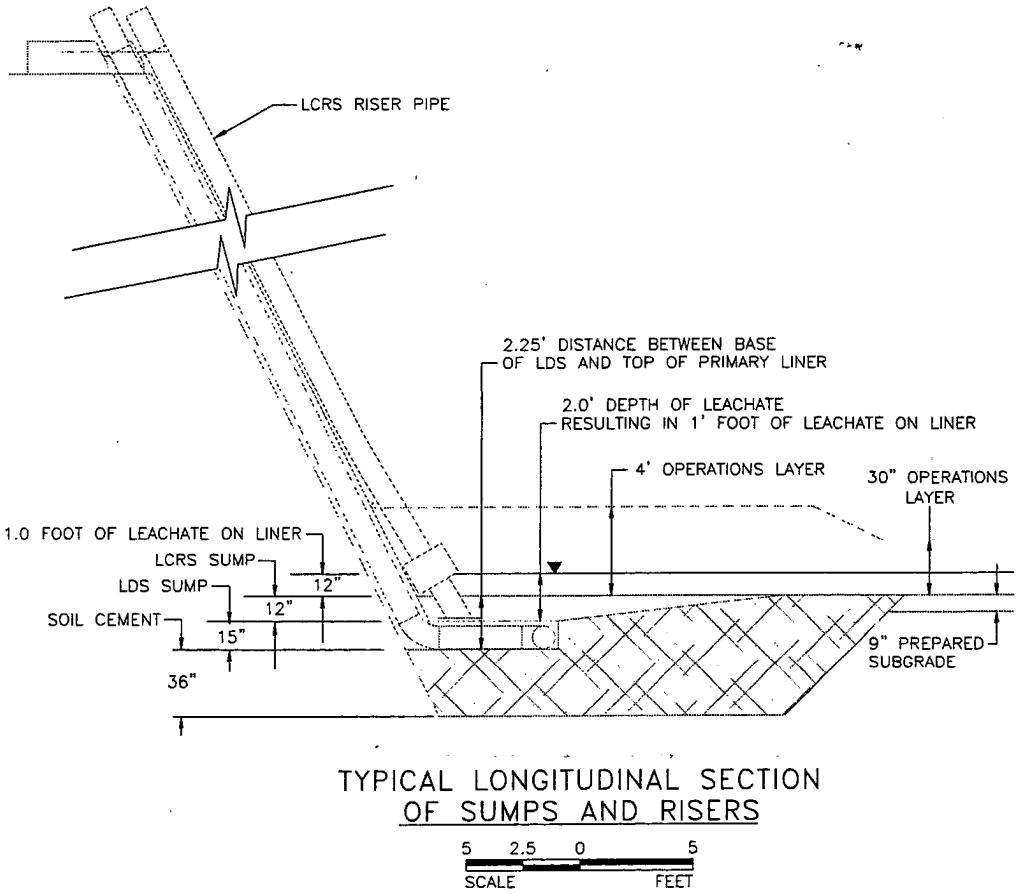

As shown in the typical sump layout figures (Figures 2 and 3), there are two potentially controlling sections:

1) the 7'x 7' LDS perimeter at 15" thick; and

2) the perimeter at the grade break between the 1 and 10 percent slopes.

To determine the controlling section, the flow at each section was determined as:

Total Flow = Flow at section * Section Length (perimeter).

Total Flow at 7'x 7' LDS perimeter = 133 gal/day/ft * (7'+7'+7') = 2,793 gal/day

Total Flow at 1 to 10% grade break = 13 gal/day/ft * (18'+34'+18') = 910 gal/day

Therefore, the controlling section is located at the grade break from 1 percent to 10 percent surround each of the three sumps. The grade break has a 70 feet long perimeter Contribution to flow from the fourth side (against the trench sidewall) is ignored.

Total flow capacity for each cell contributing to each sump (including floor and sidewalls) and total area for each cell are shown in the table below and are used to calculate the ALR.

The smallest pump that has been used in the LDS system of Trench 11 is a two-inch pump. That pump has a maximum flow rate of nine gallons per minute, which is greater than the maximum flow that the Trench 12 system can deliver. The same pump or equivalent is anticipated for use in Trench 12 LDS sumps. A specification sheet for the pump is included.

Sump	Total Flow Capacity Through GSE Fabrinet UF (at i = 0.01) (gal/day)	Pump Capacity (gallons/day)	Trench Area Served by Sump (acres)	ALR (gal/acre/day)
12A	910	2,160	4.45	204
12B	910	2,160	3.45	264
12C	910	2,160	3.26	279

Result

Sumps 12A, 12B, and 12C of Trench 12 all have the same design. The only difference between the three sumps is the size of the area draining to the sumps. Sump 12A has the largest drainage area at 4.45 acres.

The Iron Horse IH125 Extended-Duty Piston Pump or equivalent is acceptable for use in Trench 12 LDS sumps.

Flow through the 300-mil GSE Fabrinet UF (or equivalent) at 1 percent up to the perimeter of the sump (at the grade break) is the controlling section for ALR determination. The total flow at each of the three sumps at this controlling section is 910 gallons per day. This results in the lowest ALR occurring in Cell 12A at 204 gallons per acre-day. Flow from any of the three sumps exceeding 910 gallons per day might result in fluid head rising on the bottom liner. Determination of exceedence of the 910 gallons per day flow will result in the implementation of a response action.

Flow through the 300-mil GSE Fabrinet UF at 10 percent gradient up to the perimeter of the 7' x 7' area around the LDS pipe and pump is sufficient, and does not result in accumulation of water on the LDS liner.

AquAeTer

optimizing environmental resources - water; air; earth

CALCULATION SUMMARY SHEET

PROJECT NUMBER: 103247

PROJECT NAME: USEN T12/PH2 Construction QC and Certification

DATE: March 28, 2011

CALCULATION NUMBER: (not assigned) Revision: Update 2008 ALR calculation

CALCULATION TITLE: Determine Sump 12B ALR for 220 mil Geocomposite

DESCRIPTION OF CALCULATION:

Revision of ALR determination for Trench 12, Phase 12B LDS geocomposite

REFERENCES USED: Number of Reference Pages Attached: 8

1. August 2008 Response Action Plan, LDS for Trench 12 (5/20/08 ALR Calculation)
2. Skaps TN220-2-6 delivered material specs.
4. Drawing NV12-11-021, As built topography of Phase 12B cell floor
3. Geosynthetics Research Institute Standard GC8

REVIEW COMMENTS:

CALCULATION MADE BY: SLW DATE: 28 March 2011

CALCULATION CHECKED BY: CAB DATE: 28 March 2011

CALCULATION REVISED BY: DATE:

CALCULATION REVIEWED BY: SLW DATE: 28 March 2011

Purpose of Calculation

Determine flow carrying capacity of a 220-mil double-sided geocomposite (TN220-2-6) in the LDS portion of the liner system on the floor of Trench 12- Phase 12B for the purpose of revising the Action Leakage Rate (ALR) for the Phase 12B sump. Revision of the ALR is required because TN220-2-6 geocomposite was used in the construction of Sump 12B instead of the 300-mil geocomposite that was intended (per approved design) to be used.

Method

Determine the flow carrying capacity of the 220 mil geocomposite by the same method used in the similar calculation made for the Trench 12 Response Action Plan (2008). The revised calculation uses the same safety factors (i.e., capacity reduction factors) that were used in the 2008 calculation rather than the less conservative capacity reduction factors that are recommended by GRI in GC8. These factors, though more conservative than recommended by GRI are used for consistency with previous Trench 12 LDS calculations.

Analysis

USEPA guidance on Action Leakage Rates for Leak Detection Systems (EPA 530-R-92-004, 1992) defines the ALR as the "maximum design flow rate that the leak detection system can remove without the fluid head on the bottom liner exceeding one foot." As such, the ALR is the flow the drainage media (in this case, a 220-mil geocomposite) can convey as free flow under the influence of gravity at the actual slope (gradient) of the installed geocomposite. The calculation considers no head build-up, thus gradient is the only driving force causing the liquid flow. Flow constriction, such as narrowing of the flow pathway width near the sump entrance, becomes the controlling factor in ALR determination.

Flow Geometry

The typical bottom liner is shown below.

Figure 1. Typical Trench Bottom Configuration

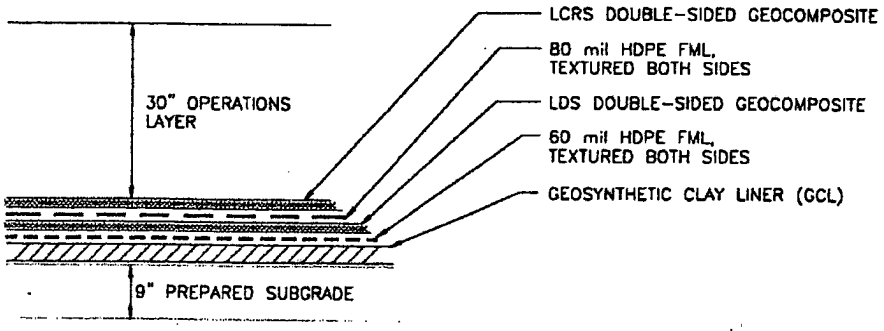

For Phase 12B, the LDS double-sided geocomposite is the 220-mil thick Skaps TN220-2-6 geocomposite. This material type differs from the 300-mil geocomposite specified for the LDS liner NDEP-approved Trench 12 design and, as such, is intended to apply only to the Phase 12B area and Sump 12B.

Figure 2. Typical Sump Layout

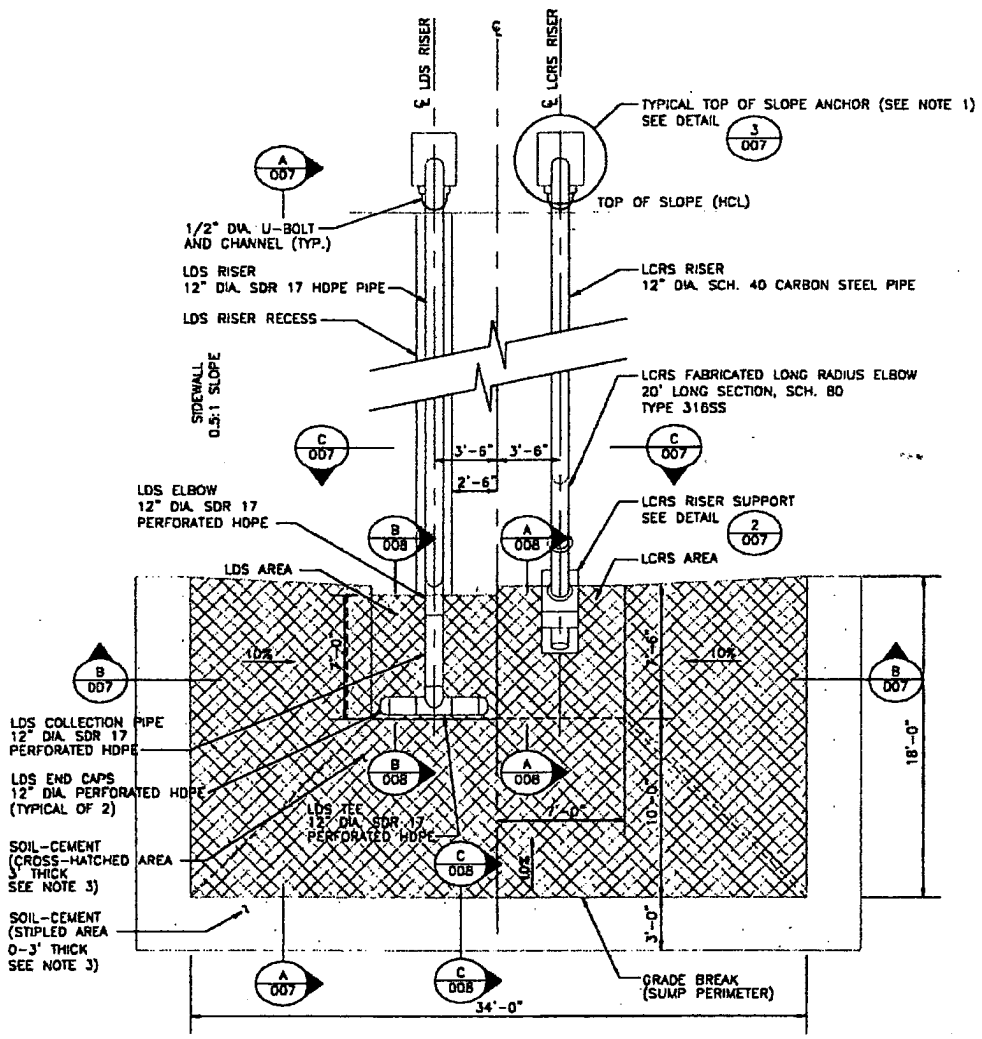

Flow Capacities

The following flow determination apply to the geocomposite component LDS part of the Phase 12B liner system.

- Double sided geocomposite (Skaps Transnet TN220-2-6).

The 220-mil double sided geocomposite is used in the LDS sideslope liner as well as in the LDS bottom liner. A single, continuous layer of geocomposite is used. Therefore, flow within in the LDS is controlled by the slope of the landfill cell bottom and the geometry of the sump entry.

The flow carrying capacity of the geocomposite is assumed to be equal to test values for material used in Phase 12B construction, as reported by the manufacturer at the time of installation. The geometric mean of those actual values is:

$$\Theta_{manufacturer} = [2.85 \times 10^{-4} * 2.86 \times 10^{-4} * 2.98 \times 10^{-4}]^{-1/3} \text{ in } m^2/sec$$

$$= 2.90 \times 10^{-4} \ m^2/sec$$

In actual use as a landfill liner system component, the capacity of the material can decrease over time in response to textile intrusion (IN), creep (CR), chemical (CC), and biological (BC) factors. Although the most conservative application of these factors likely applies only at a point in time late in the life of the landfill, to make the calculation of flow carrying capacity appropriately conservative, these factors are considered (as shown below) to reduce the manufacturer's determination of material property from the outset of landfill operation.

$$\Theta_{eff} = [\Theta_{manufacturer}] \div [FS_{IN} * FS_{CR} * FS_{CC} * FS_{BC}]$$

The following table shows the determination of unit flow capacity for the geocomposite based on the mean transmissivity and safety factors.

Flow Element	$\Theta_{manufacturer}$	FS_{IN}	FS_{CR}	FS_{CC}	FS_{BC}	Θ_{eff}
Units	m^2/s	NA	NA	NA	NA	m^2/s
TransNet 220-2-6	2.90×10^{-4}	1.5	1.4	1.5	1.5	6.14×10^{-5}

Considering the reduced transmissivity of the material, flow within the geocomposite is calculated using Darcy's Law (which assumes laminar flow). GC8 is included as a reference for the formula that is used below.

$$q_{actual} = \Theta_{eff} * i$$

Where

q_{actual} = flow per unit width of material, based on effective material transmissivity

Θ_{eff} = effective transmissivity, based on actual transmissivity reported by manufacturer

i = hydraulic gradient

Flow within the material is controlled by effective transmissivity (Θ_{eff}) and the actual (as-built) slope of the LDS floor liner. In the Trench 12B floor area, the average slope of the trench floor subbasins that potentially direct leakage to Sump 12B, as taken from Drawing NV12-11-021, is 1.7% in the area outside (above) the Outer Sump entry. The average slope is 10% in the area between the Outer Sump entry and the Main Sump entry. The determination of flow potential (q_{actual}) per unit width of flow path in each area of the sump entry is determined below.

Flow Element	Θ_{eff}	i	q_{actual}	q_{actual}
	m^2/s	NA	$m^3/s/m$	gal/day/ft
TransNet 220-2-6	6.14×10^{-5}	0.017	1.04×10^{-6}	7.26
	6.14×10^{-5}	0.1	6.14×10^{-6}	42.72

Conversion: $1.0\ m^3/s/m = 1.0\ m^2/s = 6.9569 \times 10^6$ gpd/ft

These values of q_{actual} are applied to the length of the controlling geocomposite section at each of the Sump 12B entries (Outer Sump and Main LDS Sump) to determine the total daily flow and daily flow per contributing area (in acres). These values are considered to determine the ALR for Sump 12B.

The total sidewall and floor area of the Phase 12B landfill cell, 3.45 acres, is considered in these calculations.

Controlling Section at **Outer Sump entry**

This calculation focuses on the flow restriction (controlling cross-section) at the perimeter of the grade break between the main landfill cell floor (1.7% average slope) and the interior slope of the Outer Sump area (10%). The Outer Sump has a perimeter of 70 feet at the grade break between the cell floor and the sump. This dimension does not include the sump side that is against the sidewall because little flow is contributed from the sidewall, the sidewall slope is steep (increasing flow), and a double-thickness of geocomposite is installed at the sidewall/floor transition. The table below shows the value that would become the ALR if the TN220-2-6 geocomposite layer at the Inner Sump Entry is the controlling geocomposite section.

Sump	q_{actual}	Width of Controlling Section	ALR	ALR
	gal/day/ft	Feet	gallons/day	gpd/acre
12B	7.26	70	508.2	147.3

Controlling Section at **Main Sump Entry**

Within the 7'x7' Main LDS Sump area immediately surrounding the LDS riser pipe, the perimeter is 21 feet (not including the sump side that is against the sidewall) as shown in the typical sump layout figure. The table below shows the value that would become the ALR if the

TN220-2-6 geocomposite layer at the Main LDS Sump Entry is the controlling geocomposite section.

Sump	q_{actual}	Width of Controlling Section	ALR	ALR
	gal/day/ft	Feet	gallons/day	gpd/acre
12B	42.72	21	897.1	260.0

Verification Calculation Result

This calculation determines Sump 12B ALR value (as total daily flow to the sump and total daily flow in gallons per contributing acre (gpd/ac) for Trench 12, Phase 12B. The ALR at the Outer Sump Entry is 147.3 gpd/ac and the ALR at the Main Sump Entry is 260 gpd/ac. The lower value, 147.3 gpd/ac, becomes the ALR for the Phase 12B area. As indicated, this ALR is equivalent to a total daily flow to Sump 12B of approximately 508 gallons.

Actions that would be required in the event of LDS sump flows exceeding the 508 gallons per day ALR value are provided in the approved Trench 12 Response Action Plan. This modified ALR is applicable only to Sump 12B and replaces the Sump 12B value included in the 2008 RAP. ALRs for Sumps 12A and 12C are not changed by this calculation.

Appendix B

Pump Specification Sheet

Rugged, Reliable, and Keeps On Running

IRON HORSE™ PUMPS ARE AVAILABLE IN TWO SIZES, BACKED BY QED'S 20+ YEARS OF LANDFILL PUMP EXPERIENCE

NEW! Iron Horse™ Extended-Duty Piston Pumps for remediation and landfills — the first piston pumps durable enough to carry the QED name.

These all-new stainless steel piston pumps are the first engineered for extended duty in harsh landfill and groundwater cleanup environments. Their unique seal-less design eliminates seal failure, the most frequent cause of pump breakdowns and high maintenance costs. Iron Horse™ uses the same ultra-hard metal surfaces and materials as concrete pumps for superior durability and service life. Even the check valves are heavy duty, stainless steel, not soft plastic. At the wellhead the driver air cylinder and its controls are fully enclosed for safety and protection from dust and corrosion.

Piston Pump Advantages:

- very low drawdown where needed
- suitable for slant or horizontal wells
- isolates driver air from pumped liquid

Iron Horse™ pumps have been proven under extreme conditions of high temperature, corrosion, and pumping solids. Models are available for flow rates to 5 gpm and depths over 400 ft.

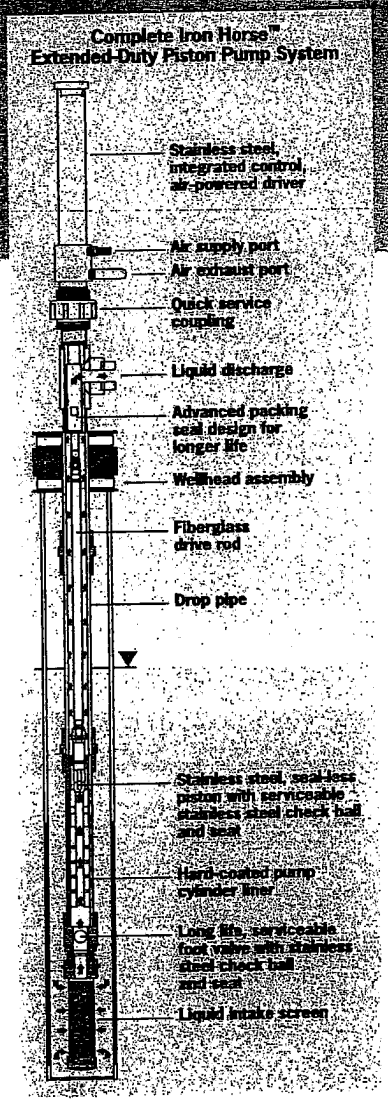

IRON HORSE

Patent Pending

Trial Offer! Contact QED Today

Many landfills can significantly cut maintenance costs by switching to Iron Horse™ Extended-Duty Piston Pumps. To learn more about the Iron Horse™ trial offer, call QED at:

1-800-810-9912, or visit www.qedenv.com

QED

Environmental Systems

The #1 Choice of Groundwater Professionals

LEADERS IN ENVIRONMENTAL COMPLIANCE PRODUCTS

IRON HORSE™

Extended-Duty Piston Pumps

For Remediation and Landfill Pumping

IRON™ HORSE

The first piston pump durable enough to carry the QED name

QED

Environmental Systems

A division of Severn Trent Laboratories, Inc.

IRON HORSE Extended-Duty Piston Pumps Built for

IRON HORSE Extended-Duty Piston Pumps are built for durability based on QED's 20 years of engineering experience in landfill pumping. IRON HORSE pumps are designed to provide dependable pumping in applications that benefit from the special capabilities of piston pumps, such as slant wells, sites requiring no drive air with the pumped fluids, deeper wells, and drawdown to extremely low levels.

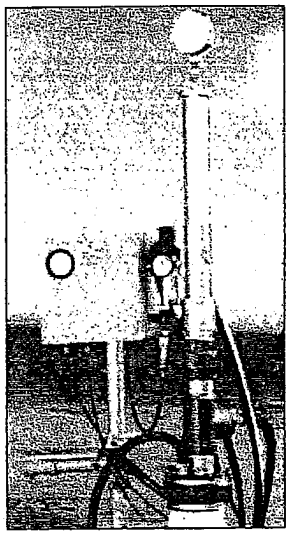

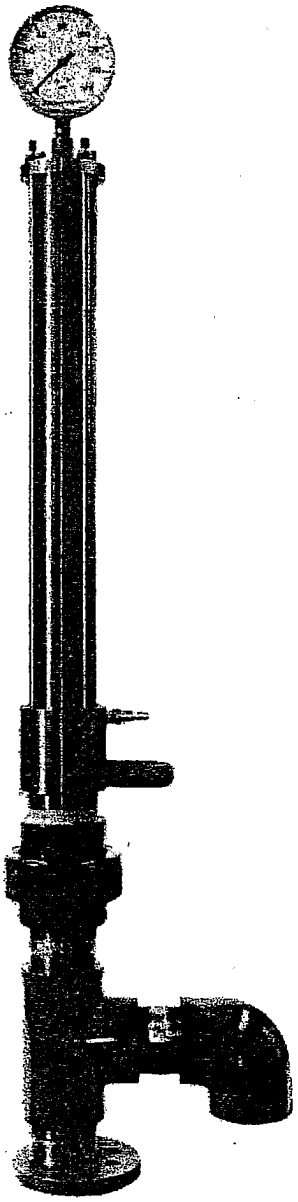

IRON HORSE pumps are air-powered and use a reciprocating air cylinder at the wellhead to drive a piston down in the well, connected by a flexible fiberglass rod. Each piston stroke lifts a known amount of liquid and provides positive suction at the inlet. Piston pumps can be installed in wells and risers at any angle, including horizontal.

Unlike older piston pump designs used in landfills and remediation sites, IRON HORSE pumps are designed from the start for durability and serviceability to greatly reduce maintenance frequency and costs. In comparative testing, IRON HORSE has demonstrated critical component life many times that of older piston pump designs. IRON HORSE'S simplicity and strength advantages are visible even from first appearances. QED's extensive engineering experience and resources have delivered the first piston pump good enough to carry our name.

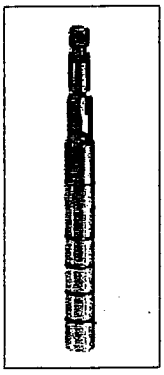

What makes IRON HORSE piston pumps more durable?
IRON HORSE pump's durability advantage is based on better engineering solutions to the challenges of landfill and remediation pumping. Examples of important IRON HORSE pump durability features include:

- Heavy-duty, stainless steel construction used for key components subject to wear, such as the piston and check valves.
- Rugged, oil well type, all-stainless steel piston
- Ultra-hard metal surfaces and special seal materials for longer service, as used in concrete pumps and industrial slurry equipment
- Serviceable driver air cylinder components to avoid having to replace the entire unit when it wears out.
- Serviceable stainless steel check valves downwell, instead of throwaway plastic type.
- Simpler, more reliable built-in air cylinder controls, similar to those used on jackhammers, rather than weather-exposed valves and tubing circuits.

Durability, Backed by the Leaders in Air-Powered Landfill Pumping

How it Works

The IRON HORSE pump has four major components:

- A reciprocating air cylinder at the wellhead.
- A liquid pumping piston and cylinder at the bottom of the well.
- A fiberglass rod connecting the air cylinder to the downwell piston.
- A downwell drop pipe which provides the flow conduit from the downhole pump to the wellhead.

The air cylinder is connected via a flexible, one-piece fiberglass rod to the liquid pump piston. The piston reciprocates within a specially designed stainless steel cylinder located at the bottom of the drop pipe.

Supplying compressed air to the air cylinder starts it reciprocating – automatically. The reciprocating action is controlled by heavy-duty, jackhammer type controls built into the cylinder itself. The recommended level control is referenced to pressure and vacuum in the well, and provides accurate and reliable pump shutoff when the desired level is reached.

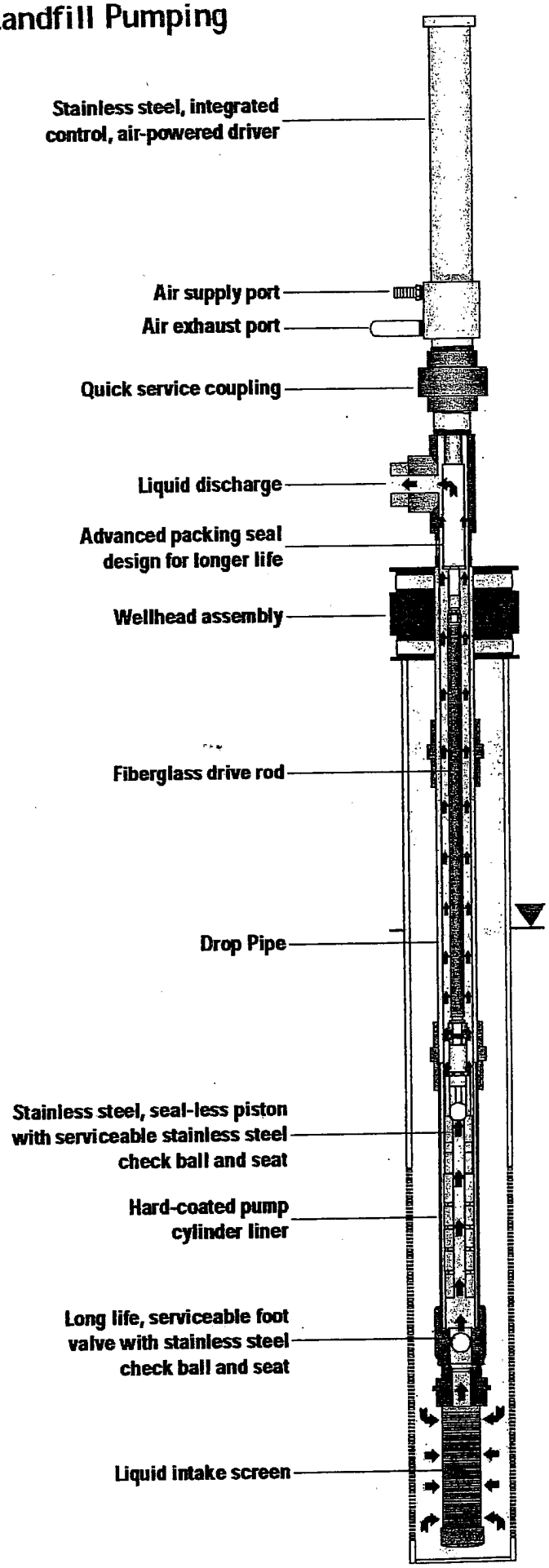

Advantages

- Extended duty between service compared to other piston pump designs
- Simple driver with reliable, built-in reciprocation mechanism
- Seal-less, stainless steel pump piston
- Serviceable check valves and drive cylinder
- Extreme low drawn-down capability
- Isolates driver air from pumped liquid
- Slant-well and horizontal applications

IRON HORSE Extended-Duty Piston Pump Specifications

IH 125 System (1-1/4" Drop Pipe)

Max Flow Rate: 2 gpm (7.5 lpm)
Approximate Pump Volume/Cycle: 0.045 gal (.170 L)
Max. Cycle Rate: 40 cpm
Max. Depth: 400 ft. (121.9 m)
Consult factory for depths greater than 400 ft.
Min. Liquid Pumping Level Above Bottom:
Standard Screen 12 in. (30.5 cm)
Short Screen 6 in. (15.2 cm)
Max. Air Pressure: 120 psi (8.4 kg/cm2)
Air Usage: See chart below
Min. Well Casing Inside Diameter: 4" (10.2 cm)

Model IHD - Driver Assembly:
Weight: 22 lbs. (9.97 kg)
Length: 50 in. (1.27 m) without gauge
Max. Diameter: 4 in. (10.2 cm)
Drive Piston Diameter: 2 in. (5.08 cm)

Wellhead Assembly
QED offers 4", 5", 6" or 8" wellhead caps and flanges required to support and operate the system.

Model IH125 - Downwell Pump Assembly (Piston, Cylinder, Foot-Valve, Screen)

Piston:
Weight: 1.5 lbs. (.68 kg)
Length: 11 in. (27.9 cm)
Diameter: 1.06 in. (2.69 cm)

Pump Cylinder Assembly:
Weight: 5 lbs. (2.27 kg)
Length: 58 in. (1.47 m)
Outside: Diameter 2.25 in. (5.72 cm)

Model 39538 Drive Rod:
1/2 in. (1.27 cm) diameter, 3/8 in. (.952 cm) pultruded epoxy and glass fiber with protected anti-abrasion coating

Drop Pipe, not supplied by QED: 1 1/4 in. (3.175 cm) CPVC, Schedule 80, 10 ft. (3.04 m) sections, threaded connectors

Model 39573 Pneumatic Bubbler Level Control:
(References to well-head vacuum)
Weight: 14 lbs. (6.35 kg)
Size: 12 in. (30.4 cm) high x 15 in. (38.1 cm) wide x 6 in. (15.2 in.) deep, (Complete, with regulator, mounting brackets and connection fittings)

IH 200 System (2" Drop Pipe)

Max Flow Rate: 5 gpm (18.9 lpm)
Approximate Pump Volume/Cycle: 0.120 gal (.454 L)
Max. Cycle Rate: 40 cpm
Max. Depth: 180 ft. (54.8 m)
Consult factory for depths greater than 180 ft.
Min. Liquid Pumping Level Above Bottom:
Standard Screen 18 in. (45.7 cm)
Short Screen 6 in. (15.2 cm)
Max. Air Pressure: 120 psi (8.4 kg/cm2)
Air Usage: See chart below
Min. Well Casing Inside Diameter: 5" (12.7 cm)

Model IHD - Driver Assembly:
Weight: 22 lbs. (9.97 kg)
Length: 50 in. (1.27 m) without gauge
Max. Diameter: 4 in. (10.2 cm)
Drive Piston Diameter: 2 in. (5.08 cm)

Wellhead Assembly
QED offers 5", 6" or 8" wellhead caps and flanges required to support and operate the system.

Model IH200 - Downwell Pump Assembly (Piston, Cylinder, Foot-Valve, Screen)

Piston:
Weight: 6.5 lbs. (2.94 kg)
Length: 18 inches (45.7 cm)
Diameter: 1.75 in. (4.44 cm)

Pump Cylinder Assembly:
Weight: 8.5 lbs. (3.85 kg)
Length: 64 in. (1.62 m)
Outside Diameter: 3.35 in. (8.51 cm)

Model 39538 Drive Rod:
1/2 in. (1.27 cm) diameter, 3/8 in. (.952 cm) pultruded epoxy and glass fiber with protected anti-abrasion coating

Drop Pipe, not supplied by QED: 2 in. (5.08 cm) CPVC, Schedule 80, 10 ft. (3.04 m) sections, threaded connectors

Model 39573 Pneumatic Bubbler Level Control:
(References to well-head vacuum)
Weight: 14 lbs. (6.35 kg)
Size: 12 in. (30.4 cm) high x 15 in. (38.1 cm) wide x 6 in. (15.2 in.) deep, (Complete, with regulator, mounting brackets and connecton fittings).

Materials of Construction

Above-Ground Pump Driver Materials:
Driver Assembly: Stainless Steel / Aluminum
Stuffing Box: Stainless Steel
Wellhead Assembly: Nylon, CPVC, Stainless Steel

Down-Well Pump Materials:
Drive Rod: Fiberglass
Pump Piston: Stainless Steel
Pump Piston Seal: Labyrinth Seal (seal-less)
Pump Piston Check Ball & Seat: Stainless Steel
Pump Housing Assembly: Stainless Steel / CPVC
Foot-Valve (Check Ball & Seat): Stainless Steel
Intake Screen: CPVC or Stainless Steel

Hose & Tubing Options:
Pump Air Supply: 3/8 in. (.952 cm) ID Rubber Air Hose
Liquid Discharge:
1-in. (2.54 cm) ID Nylon Tube or Rubber Hose
Level Control Bubbler Tube:
1/4 in. (.635 cm) OD Black Nylon
Level Control Reference Tube:
5/16 in. (.793 cm) Black Nylon

Application Temperature Range: Max 180° F (82.2 C)
Downhole Min: -20° F (-28.9 C) Surface

Warranty:
Limited (1) one-year warranty for parts and labor on all system components. Warranty begins on delivery date.

IRON HORSE™
Patent Pending

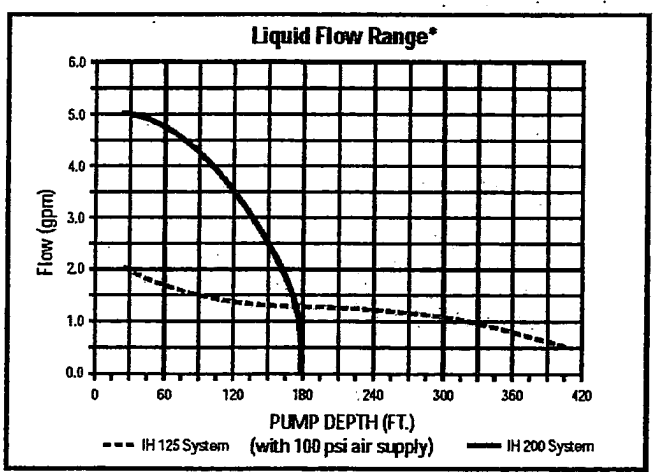

*consult factory for depths greater than 400ft.

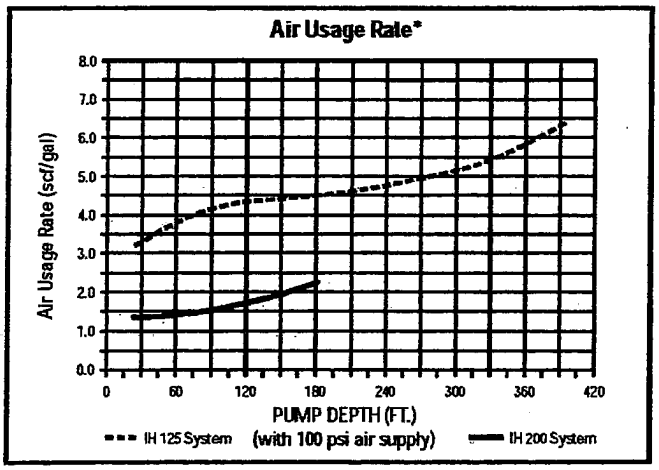

*consult factory for depths greater than 400ft.

QED
Environmental Systems
A division of Serem Team Laboratories, Inc.

6095 Jackson Road
Ann Arbor, MI 48106-3726
USA

1.800.624.2026
T: 734.995.2547
F: 734.995.1170

info@qedenv.com
www.qedenv.com