Wannalancit Mills
650 Suffolk Street
Lowell, MA 01854

978.970.5600 PHONE
978.453.1995 FAX

www.TRCsolutions.com

May 6, 2015

Victor Alvarez
US Environmental Protection Agency
RGP-NOI Processing
5 Post Office Square, Suite 100
Mailcode: OEP06-4
Boston, Massachusetts 02109-3912

Re: Notice of Intent (NOI) for Coverage under the Remediation General Permit (RGP)
Algonquin Gas Transmission, LLC - Salem Lateral Project
24 Fort Avenue, Salem, Massachusetts

Dear Mr. Alvarez:

Algonquin Gas Transmission, LLC (Algonquin), an indirect, wholly-owned subsidiary of Spectra Energy Partners, LP, plans to construct the Salem Lateral Project (Project or Salem Lateral Project), which will involve construction of a new 1.2-mile long, 16-inch diameter pipeline lateral and associated metering and flow regulating (M&R) station located in the City of Salem, Essex County, Massachusetts. Algonquin is seeking authorization from the Federal Energy Regulatory Commission (FERC) pursuant to Section 7(c) of the Natural Gas Act (NGA) to construct, install, own, operate, and maintain the Salem Lateral Project. The staff of the FERC prepared an environmental assessment (EA) for the Salem Lateral Project in December 2014 under FERC Docket No. CP14-522-000. The FERC staff concluded in the EA that approval of the proposed Project, with appropriate mitigating measures, would not constitute a major federal action significantly affecting the quality of the environment.

TRC, on behalf of Algonquin, is submitting the attached National Pollutant Discharge Elimination System (NPDES) Notice of Intent (NOI) for coverage under the Remediation General Permit (RGP). This application addresses dewatering requirements associated with soil excavation for the pipeline trench and horizontal directional drilling (HDD) entry/exit point at Footprint Power Salem Harbor Development, LP's Salem Harbor Station located at 24 Fort Avenue in Salem, Massachusetts. A limited amount of hydrostatic pressure test water generated during testing of the constructed pipeline may also be treated and discharged under the RGP. In addition to the NOI application form, a site location map, site plan, discharge location map, groundwater treatment system flow diagram, tabulated groundwater analytical results and groundwater analytical data report are attached.

The detection limits for some of the compounds of interest are above the RGP discharge standards for saltwater. Some of the detection limits for volatile and semi-volatile organic compounds (VOCs and SVOCs) are elevated due to a matrix interference associated with petroleum compounds in the sample. However, treatment of the groundwater through bag filters and carbon vessels should reduce or eliminate the matrix interference such that the detection limits for future

compliance monitoring samples will be below the RGP discharge standards for saltwater. Some compounds also have laboratory detection limits above the RGP discharge standards for saltwater and it is understood that the best available detection limits were achieved by the laboratory and are sufficient.

TRC has collected a groundwater sample from an existing on-site monitoring well at Salem Harbor Station (TT-119C) that is considered representative of groundwater that will be extracted, treated and discharged to Salem Harbor under the RGP permit. Groundwater quality results are summarized in the attached table and the laboratory report is also attached. Potential constituents of concern include total suspended solids, total petroleum hydrocarbons (TPH), SVOCs, and metals (iron, lead and zinc). The oil/water separator depicted on the drawings will be mobilized if non-aqueous phase liquid (if encountered) cannot be manually removed from the fractionation tank.

The proposed dewatering treatment system is designed to process up to 400 gallons per minute (gpm) of dewatering fluids. The treatment system will consist of the following process components:

1) One trench dewatering pump and one transfer pump;
2) Fractionation tank for removal of suspended solids, settleable solids, and oil and grease;
3) Bag filters for effluent polishing prior to granular activated carbon (GAC) treatment; and,
4) Two GAC filters connected in series.

Treated effluent from the system will be discharged directly to Salem Harbor which forms a property boundary to the site. Algonquin has identified three potential discharge points; two are on-site storm sewers that drain directly to Salem Harbor and the third is a direct discharge to Salem Harbor. Algonquin is still working on the discharge logistics with its contractor and Footprint and will select the discharge location soon.

Total metals concentrations in untreated groundwater for iron, lead and zinc exceed the saltwater discharge standards under the RGP; however, it is expected that the post-treatment effluent will comply with RGP discharge standards after processing through bag filters and the carbon filtration. If the proposed processing equipment does not achieve the discharge standards then the system will be shut down and modifications implemented. The proposed construction dewatering treatment system will be maintained and monitored in accordance with all applicable requirements under the RGP. Algonquin anticipates that the dewatering system will be required periodically between June 2015 and December 2015.

Salem Harbor is listed on the Massachusetts 303(d) list as an impaired water body for pathogens (segment ID MA93-54). Discharge of treated effluent from the dewatering treatment system will be in compliance with the effluent limitations contained in the RGP and will not exacerbate this water quality impairment condition.

Algonquin has obtained coverage for the Salem Lateral Project under the NPDES 2012 General Permit for Construction Activities on February 23, 2015 (Permit No. MAR120000; Tracking No. MAR12B372).

Algonquin has consulted with the U.S. Fish and Wildlife Service (USFWS) and National Marine Fisheries Service (NMFS) regarding the Project and received responses stating that no federally listed or proposed, threatened or endangered species or critical habitat under USFWS or NMFS jurisdiction are known to occur in the Project area (see attached correspondence). In addition, we have attached a USFWS official species list for the vicinity of the Project area. The roseate tern and red knot are on this list; however, the area targeted for earthwork is on the existing Salem Harbor Station power plant property, therefore it is not habitat for these birds. There are no Areas of Critical Environmental Concern in the vicinity of the Project.

The Project has been reviewed by the FERC, Massachusetts Historical Commission and Massachusetts Board of Underwater Archaeological Resources in accordance with Section 106 of the National Historic Preservation Act of 1966, as amended. Algonquin's Section 106 consultation with these agencies has been completed and it was determined that no cultural resources will be adversely affected by the Project (see attached correspondence).

Algonquin seeks EPA's concurrence that the proposed discharge activity qualifies for coverage under the RGP. Your assistance in processing this application within the 30 day review period is greatly appreciated. If you have any questions or would like additional information please feel free to call me at 207-274-2604.

Sincerely,

TRC Environmental Corporation

Richard C. Paquette, Jr.

Richard C. Paquette, Jr.
Senior Project Manager

cc: Matthew Oliveira; Jamie Stapleton; Kelley Race, TRC
Sabrina Hepburn, Spectra Energy
Tom Devine, Salem Conservation Commission
Rob DeRosier, Footprint Power

Attachments:

1. NOI Application Form
2. Site Location Map
3. Site Plan (URAM Work Area)
4. Map of Discharge Points
5. Groundwater Treatment System Flow Diagram
6. Summary of Groundwater Analytical Results
7. Laboratory Data
8. Groundwater Water Quality Data Summary and Data Package
9. Agency Correspondence

ATTACHMENT 1

NOI Application Form

B. Suggested Form for Notice of Intent (NOI) for the Remediation General Permit

1. General site information. Please provide the following information about the site:

a) Name of **facility/site**: Salem Lateral Project at Salem Harbor Station		**Facility/site** address: Footprint Salem Harbor Station		
Location of **facility/site**: longitude: -70.878212 latitude: 42.525022	Facility SIC code(s): 4900	Street: 24 Fort Avenue		
b) Name of **facility/site owner:** Footprint Power Salem Harbor Development, LP		Town: Salem		
Email address of owner: rderosier@footprintsalemharbor.com		State: Massachusetts	Zip: 01970-5693	County: Essex
Telephone no.of facility/site **owner**: 978-660-7112				
Fax no. of facility/site **owner**: 978-744-6900		**Owner** is (check one): 1. Federal____ 2. State/Tribal_____ 3. Private__✔___ 4. other, if so, describe:		
Address of **owner** (if different from site): Algonquin Gas Transmission, LLC				
Street: 890 Winter Street, Suite 300				
Town: Waltham	State: MA	Zip: 02451	County: Middlesex	
c) Legal name of **operator**: Algonquin Gas Transmission, LLC	**Operator** telephone no: (617) 560-1424			
	Operator fax no.:		**Operator** email: SHepburn@spectraenergy.com	
Operator contact name and title: Sabrina Hepburn - Environmental Project Manager				
Address of **operator** (if different from owner):	Street:			
Town:	State:	Zip:	County:	

d) Check "yes" or "no" for the following:
1. Has a prior NPDES permit exclusion been granted for the discharge? Yes___ No__✔__, if "yes," number:
2. Has a prior NPDES application (Form 1 & 2C) ever been filed for the discharge? Yes___ No__✔__, if "yes," date and tracking #:
3. Is the discharge a "new discharge"as defined by 40 CFR 122.2? Yes__✔__ No___
4. For sites in Massachusetts, is the discharge covered under the MA Contingency Plan (MCP) and exempt from state permitting? Yes__✔__ No___

e) Is site/facility subject to any State permitting or other action which is causing the generation of discharge? Yes___ No_✔_ If "yes," please list: 1. site identification # assigned by the state of NH or MA: 2. permit or license # assigned: 3. state agency contact information: name, location, and telephone number:	f) Is the site/facility covered by any other EPA permit, including: 1. multi-sector storm water general permit? Y___ N✔_, if Y, number: 2. phase I or II construction storm water general permit? Y✔_ N___, if Y, number: MAR120000 3. individual NPDES permit? Y___ N✔_, if Y, number: 4. any other water quality related permit? Y✔_ N___, if Y, number: RGP Permit MAG910000

2. Discharge information. Please provide information about the discharge, (attaching additional sheets as needed) including:

a) Describe the discharge activities for which the owner/applicant is seeking coverage: Soil excavation to facilitate the installation of a 16-inch diameter natural gas pipeline.		
b) Provide the following information about each discharge:	1) Number of discharge points: 3 potential points	2) What is the **maximum** and **average flow rate** of discharge (in cubic feet per second, ft3/s)? Max. flow 0.9 cfs Average flow .25 cfs Is maximum flow a **design value**? Y✔_ N____ For average flow, include the units and appropriate notation if this value is a design value or estimate if not available.
3) Latitude and longitude of each discharge within 100 feet: pt.1:long. -70.879641029 lat. 42.524634115; pt.2: long. -70.877929780 lat. 42.524167600; pt.3: long. -70.876604769 lat. 42.523618056; pt.4:long._____ lat._____; pt.5: long._____ lat._____; pt.6:long._____ lat._____; pt.7: long._____ lat._____; pt.8:long._____ lat._____; etc.		
4) If hydrostatic testing, total volume of the discharge (gals): 118,000	5) Is the discharge intermittent ✔ or seasonal_____? Is discharge ongoing Yes____ No ✔ ?__	
c) Expected dates of discharge (mm/dd/yy): start 06/01/15 end 12/01/15		
d) Please attach a line drawing or flow schematic showing water flow through the facility including: 1. sources of intake water, 2. contributing flow from the operation, 3. treatment units, and 4. discharge points and receiving waters(s).		

3. Contaminant information. In order to complete this section, the applicant will need to take a minimum of one sample of the untreated water and have it analyzed for **all** of the parameters listed in Appendix III. Historical data, (i.e., data taken no more than 2 years prior to the effective date of the permit) may be used if obtained pursuant to: i. Massachusetts' regulations 310 CMR 40.0000, the Massachusetts Contingency Plan ("Chapter 21E"); ii. New Hampshire's Title 50 RSA 485-A: Water Pollution and Waste Disposal or Title 50 RSA 485-C: Groundwater Protection Act; or iii. an EPA permit exclusion letter issued pursuant to 40 CFR 122.3, provided the data was analyzed with test methods that meet the requirements of this permit. Otherwise, a new sample shall be taken and analyzed.

a) Based on the analysis of the sample(s) of the untreated influent, the applicant must check the box of the sub-categories that the potential discharge falls within.

Gasoline Only ☐	VOC Only ☐	Primarily Metals ☐	Urban Fill Sites ☐	Contaminated Sumps ☐	Mixed Contaminants ☐	Aquifer Testing ☐
Fuel Oils (and Other Oils) only ☐	VOC with Other Contaminants ☐	Petroleum with Other Contaminants ✔	Listed Contaminated Sites ☐	Contaminated Dredge Condensates ☐	Hydrostatic Testing of Pipelines/Tanks ✔	Well Development or Rehabilitation ☐

b) Based on the analysis of the untreated influent, the applicant must indicate whether each listed chemical is **believed present** or **believed absent** in the potential discharge. Attach additional sheets as needed.

PARAMETER	**Believe Absent**	**Believe Present**	**# of Samples (1 min-imum)**	**Type of Sample (e.g., grab)**	**Analytical Method Used (method #)**	**Minimum Level (ML) of Test Method**	**Maximum daily value**		**Avg. daily value**	
							concentration (ug/l)	**mass (kg)**	**concentration (ug/l)**	**mass (kg)**
1. Total Suspended Solids		✔	1	Grab	2540D	15,000 ug/L	66,000 ug/L	48	66,000 ug/L	12
2. Total Residual Chlorine	✔		1	Grab	4500CL-D	20 ug/L	0	0	0	0
3. Total Petroleum Hydrocarbons		✔	1	Grab	1664A	4,400 ug/L	119,000 ug/L	86.5	119,000 ug/L	21.6
4. Cyanide	✔		1	Grab	4500CN-CE	5.0 ug/L	0	0	0	0
5. Benzene	✔		1	Grab	8260C	2.0 ug/L	0	0	0	0
6. Toluene	✔		1	Grab	8260C	3.0 ug/L	0	0	0	0
7. Ethylbenzene	✔		1	Grab	8260C	2.0 ug/L	0	0	0	0
8. (m,p,o) Xylenes	✔		1	Grab	8260C	2.0 ug/L	0	0	0	0
9. Total BTEX[4]	✔		1	Grab	8260C	4.0 ug/L	0	0	0	0

[4] BTEX = Sum of Benzene, Toluene, Ethylbenzene, total Xylenes.

PARAMETER	Believe Absent	Believe Present	# of Samples (1 min-imum)	Type of Sample (e.g., grab)	Analytical Method Used (method #)	Minimum Level (ML) of Test Method	Maximum daily value		Avg. daily value	
							concentration (ug/l)	mass (kg)	concentration (ug/l)	mass (kg)
10. Ethylene Dibromide [5] (1,2- Dibromo-methane)	✔		1	Grab	8260C	0.1 ug/L	0	0	0	0
11. Methyl-tert-Butyl Ether (MtBE)	✔		1	Grab	8260C	4.0 ug/L	0	0	0	0
12. tert-Butyl Alcohol (TBA)	✔		1	Grab	8260C	40 ug/L	0	0	0	0
13. tert-Amyl Methyl Ether (TAME)	✔		1	Grab	8260C	2.0 ug/L	0	0	0	0
14. Naphthalene	✔		1	Grab	8260C	10 ug/L	0	0	0	0
15. Carbon Tetra-chloride	✔		1	Grab	8260C	2.0 ug/L	0	0	0	0
16. 1,4 Dichlorobenzene	✔		1	Grab	8260C	20 ug/L	0	0	0	0
17. 1,2 Dichlorobenzene	✔		1	Grab	8260C	10 ug/L	0	0	0	0
18. 1,3 Dichlorobenzene	✔		1	Grab	8260C	20 ug/L	0	0	0	0
19. 1,1 Dichloroethane	✔		1	Grab	8260C	3.0 ug/L	0	0	0	0
20. 1,2 Dichloroethane	✔		1	Grab	8260C	2.0 ug/L	0	0	0	0
21. 1,1 Dichloroethylene	✔		1	Grab	8260C	2.0 ug/L	0	0	0	0
22. cis-1,2 Dichloro-ethylene	✔		1	Grab	8260C	2.0 ug/L	0	0	0	0
23. Dichloromethane (Methylene Chloride)	✔		1	Grab	8260C	12 ug/L	0	0	0	0
24. Tetrachloroethylene	✔		1	Grab	8260C	2.0 ug/L	0	0	0	0

[5] EDB is a groundwater contaminant at fuel spill and pesticide application sites in New England.

PARAMETER	Believe Absent	Believe Present	# of Samples (1 min-imum)	Type of Sample (e.g., grab)	Analytical Method Used (method #)	Minimum Level (ML) of Test Method	Maximum daily value		Avg. daily Value	
							concentration (ug/l)	mass (kg)	concentration (ug/l)	mass (kg)
25. 1,1,1 Trichloroethane	✔		1	Grab	8260C	2.0 ug/L	0	0	0	0
26. 1,1,2 Trichloroethane	✔		1	Grab	8260C	3.0 ug/L	0	0	0	0
27. Trichloroethylene	✔		1	Grab	8260C	2.0 ug/L	0	0	0	0
28. Vinyl Chloride	✔		1	Grab	8260C	4.0 ug/L	0	0	0	0
29. Acetone	✔		1	Grab	8260C	20 ug/L	0	0	0	0
30. 1,4 Dioxane	✔		1	Grab	8260C-SIM	12 ug/L	0	0	0	0
31. Total Phenols	✔		1	Grab	420.1	30 ug/L	0	0	0	0
32. Pentachlorophenol	✔		1	Grab	8270D-SIM	32 ug/L	0	0	0	0
33. Total Phthalates [6] (Phthalate esthers)	✔		1	Grab	8270D	50 ug/L	0	0	0	0
34. Bis (2-Ethylhexyl) Phthalate [Di-(ethylhexyl) Phthalate]	✔		1	Grab	8270D	30 ug/L	0	0	0	0
35. Total Group I Polycyclic Aromatic Hydrocarbons (PAH)		✔	1	Grab	8270D-SIM	10 ug/L	18.4 ug/L	0.013	18.4 ug/L	0.003
a. Benzo(a) Anthracene		✔	1	Grab	8270D-SIM	8.0 ug/L	9.8 ug/L	0.007	9.8 ug/L	0.002
b. Benzo(a) Pyrene	✔		1	Grab	8270D-SIM	8.0 ug/L	0	0	0	0
c. Benzo(b)Fluoranthene	✔		1	Grab	8270D-SIM	8.0 ug/L	0	0	0	0
d. Benzo(k) Fluoranthene	✔		1	Grab	8270D-SIM	8.0 ug/L	0	0	0	0
e. Chrysene		✔	1	Grab	8270D-SIM	8.0 ug/L	8.6 ug/L	0.006	8.6 ug/L	0.002

[6] The sum of individual phthalate compounds.

PARAMETER	Believe Absent	Believe Present	# of Samples (1 min-imum)	Type of Sample (e.g., grab)	Analytical Method Used (method #)	Minimum Level (ML) of Test Method	Maximum daily value		Average daily value	
							concentration (ug/l)	mass (kg)	concentration (ug/l)	mass (kg)
f. Dibenzo(a,h) anthracene	✔		1	Grab	8270D-SIM	8.0 ug/L	0	0	0	0
g. Indeno(1,2,3-cd) Pyrene	✔		1	Grab	8270D-SIM	8.0 ug/L	0	0	0	0
36. Total Group II Polycyclic Aromatic Hydrocarbons (PAH)	✔		1	Grab	8270D-SIM	8.0 ug/L	0	0	0	0
h. Acenaphthene	✔		1	Grab	8270D-SIM	8.0 ug/L	0	0	0	0
i. Acenaphthylene	✔		1	Grab	8270D-SIM	8.0 ug/L	0	0	0	0
j. Anthracene		✔	1	Grab	8270D-SIM	8.0 ug/L	15 ug/L	0.011	15 ug/L	0.003
k. Benzo(ghi) Perylene	✔		1	Grab	8270D-SIM	8.0 ug/L	0	0	0	0
l. Fluoranthene		✔	1	Grab	8270D-SIM	8.0 ug/L	27 ug/L	0.020	27 ug/L	0.005
m. Fluorene	✔		1	Grab	8270D-SIM	8.0 ug/L	0	0	0	0
n. Naphthalene-	✔		1	Grab	8270D-SIM	8.0 ug/L	0	0	0	0
o. Phenanthrene		✔	1	Grab	8270D-SIM	8.0 ug/L	24 ug/L	0.017	24 ug/L	0.004
p. Pyrene		✔	1	Grab	8270D-SIM	8.0 ug/L	28 ug/L	0.020	28 ug/L	0.005
37. Total Polychlorinated Biphenyls (PCBs)	✔		1	Grab	608	0.25 ug/L	0	0	0	0
38. Antimony	✔		1	Grab	6020A	2.0 ug/L	0	0	0	0
39. Arsenic		✔	1	Grab	6020A	0.5 ug/L	3.7 ug/L	0.003	3.7 ug/L	0.0006
40. Cadmium		✔	1	Grab	6020A	0.2 ug/L	0.3 ug/L	0.0002	0.3 ug/L	0.00005
41. Chromium III	✔		1	Grab	6020A	1.0 ug/L	19.1 ug/L	0.014	19.1 ug/L	0.03
42. Chromium VI		✔	1	Grab	3500CR-B	10 ug/L	0	0	0	0

PARAMETER	Believe Absent	Believe Present	# of Samples (1 min-imum)	Type of Sample (e.g., grab)	Analytical Method Used (method #)	Minimum Level (ML) of Test Method	Maximum daily value		Avg. daily value	
							concentration (ug/l)	mass (kg)	concentration (ug/l)	mass (kg)
43. Copper		✔	1	Grab	6020A	1.0 ug/L	22.2 ug/L	0.016	22.2 ug/L	0.004
44. Lead		✔	1	Grab	6020A	0.5 ug/L	9.3 ug/L	0.007	9.3 ug/L	0.02
45. Mercury	✔		1	Grab	245.1	0.2 ug/L	0	0	0	0
46. Nickel		✔	1	Grab	6020A	0.5 ug/L	12.3 ug/L	0.009	12.3 ug/L	0.002
47. Selenium	✔		1	Grab	6020A	5.0 ug/L	0	0	0	0
48. Silver	✔		1	Grab	6020A	0.3 ug/L	0	0	0	0
49. Zinc		✔	1	Grab	6020A	10 ug/L	389.7 ug/L	0.283	389.7 ug/L	0.071
50. Iron		✔	1	Grab	200.7	50 ug/L	6.6 ug/L	0.005	6.6 ug/L	0.001
Other (describe):										

c) For discharges where **metals** are believed present, please fill out the following:

Step 1: Do any of the metals in the influent have a **reasonable potential** to exceed the effluent limits in Appendix III (i.e., the limits set at zero to five dilutions)? Y_✔_ N____	If yes, which metals? Iron, lead, and zinc
Step 2: For any metals which have **reasonable potential** to exceed the **Appendix III** limits, calculate the **dilution factor (DF)** using the formula in Part I.A.3.c) (step 2) of the NOI instructions or as determined by the State prior to the submission of this NOI. What is the dilution factor for applicable metals? Metals:_____ DF: none__	Look up the limit calculated at the corresponding dilution factor in **Appendix IV.** Do any of the metals in the **influent** have the potential to exceed the corresponding **effluent** limits in Appendix IV (i.e., is the influent concentration above the limit set at the calculated dilution factor)? Y_✔_ N____ If "Yes," list which metals:

4. Treatment system information. Please describe the treatment system using separate sheets as necessary, including:

a) A description of the treatment system, including a schematic of the proposed or existing treatment system: Bag filter and GAC filtration-see attached schematic.						
b) Identify each applicable treatment unit (check all that apply):	Frac. tank ✔	Air stripper	Oil/water separator	Equalization tanks	Bag filter ✔	GAC filter ✔
	Chlorination	Dechlorination	Other (please describe):			
c) Proposed **average** and **maximum flow rates** (gallons per minute) for the discharge and the **design flow rate**(s) (gallons per minute) of the treatment system: Average flow rate of discharge 100 Maximum flow rate of treatment system 400 Design flow rate of treatment system 400						
d) A description of chemical additives being used or planned to be used (attach MSDS sheets): None						

5. Receiving surface water(s). Please provide information about the receiving water(s), using separate sheets as necessary:

a) Identify the discharge pathway:	Direct ✔	Within facility	Storm drain ✔	River/brook	Wetlands	Other (describe):
b) Provide a narrative description of the discharge pathway, including the name(s) of the receiving waters: Three potential discharge sites; two storm drain(s) which discharge to Salem Harbor, or direct discharge into Salem Harbor. Still to be determined.						
c) Attach a detailed map(s) indicating the site location and location of the outfall to the receiving water: 1. For multiple discharges, number the discharges sequentially. 2. For indirect dischargers, indicate the location of the discharge to the indirect conveyance and the discharge to surface water The map should also include the location and distance to the nearest sanitary sewer as well as the locus of nearby sensitive receptors (based on USGS topographical mapping), such as surface waters, drinking water supplies, and wetland areas.						
d) Provide the state water quality classification of the receiving water SB,						
e) Provide the reported or calculated seven day-ten year low flow (7Q10) of the receiving water_____cfs Please attach any calculation sheets used to support stream flow and dilution calculations.						
f) Is the receiving water a listed 303(d) water quality impaired or limited water? Yes ✔ No ____ If yes, for which pollutant(s)? coliform; estuarine bioassessment Is there a TMDL? Yes ____ No ✔ If yes, for which pollutant(s)?						

6. Results of Consultation with Federal Services: Please provide the following information according to requirements of Part I.B.4 and Appendices II and VII.

a) Are any listed threatened or endangered species, or designated critical habitat, in proximity to the discharge? Yes____ No ✔
Has any consultation with the federal services been completed ? Yes ✔ No___ or is consultation underway? Yes____ No ✔
What were the results of the consultation with the U.S. Fish and Wildlife Service and/or National Marine Fisheries Service (check one):
a "no jeopardy" opinion? _____ or written concurrence ✔ on a finding that the discharges are not likely to adversely affect any endangered species or critical habitat?

b) Are any historic properties listed or eligible for listing on the National Register of Historic Places located on the facility or site or in proximity to the discharge?
Yes_____ No ✔ Have any state or tribal historic preservation officer been consulted in this determination (Massachusetts only)? Yes ✔ No_____

7. Supplemental information. :

Please provide any supplemental information. Attach any analytical data used to support the application. Attach any certification(s) required by the general permit.

8. Signature Requirements: The Notice of Intent must be signed by the operator in accordance with the signatory requirements of 40 CFR Section 122.22, including the following certification:

I certify under penalty of law that this document and all attachments were prepared under my direction or supervision in accordance with a system designed to assure that qualified personnel properly gather and evaluate the information submitted. Based on my inquiry of the person or persons who manage the system, or those persons directly responsible for gathering the information, I certify that the information submitted is, to the best of my knowledge and belief, true, accurate, and complete. I certify that I am aware that there are significant penalties for submitting false information, including the possibility of fine and imprisonment for knowing violations.

Facility/Site Name: Salem Lateral Project at Footprint Salem Harbor Station

Operator signature: Sabrina Hepner

Title: Environmental Project Manager

Date: 05/05/15

ATTACHMENT 2

Site Location Map

MASSACHUSETTS

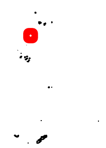

Map Location

0 1,000 2,000 Feet

Data Source: Copyright:© 2013 National Geographic Society, i-cubed

- Approximate SHS Site Boundary
- Proposed Algonquin Salem Lateral Pipeline
- Existing Algonquin HubLine Pipeline
- Existing Maritimes & Northeast Phase III Pipeline
- Tie-in with Existing Algonquin HubLine Pipeline
- Existing Maritimes & Northeast Salem M&R Station
- Proposed Algonquin Salem Lateral M&R Station
- Town Boundary

Spectra Energy

Algonquin Gas Transmission, LLC

Salem Lateral Project

Salem Harbor Station URAM

Salem, MA

FIGURE 1

SITE LOCATION MAP

Created By: TRC 12/15/14

V:\PROJECTS\AUGUSTA\SPECTRA\Salem\Fig1_Spectra_Salem_Harbor_2014_12_15.mxd

ATTACHMENT 3

Site Plan (URAM Work Area)

MASSACHUSETTS

Map Location

0 125 250 Feet

Data Source: Esri, DigitalGlobe, GeoEye, Earthstar Geographics,

- AUL Boundary - RTN 3-21283
- AOC 3 Boundary
- Former Northeast Petroleum Area - RTN 3-20421
- Approximate SHS Site Boundary
- HDD Entry/Exit Point
- Proposed Construction Limit/URAM Area
- Proposed Permanent Easement
- Proposed Algonquin Salem Lateral Pipeline
- Proposed Access Road

Spectra Energy

Algonquin Gas Transmission, LLC

Salem Lateral Project

Salem Harbor Station URAM

Salem, MA

FIGURE 2

URAM Work Area

Created By: TRC 1/21/2015

V:\PROJECTS\AUGUSTA\SPECTRA\Salem\Fig2_Spectra_Salem_Harbor.mxd

ATTACHMENT 4

Map of Discharge Points

Salem Lateral Project
Potential Discharge Points
RGP NOI Application

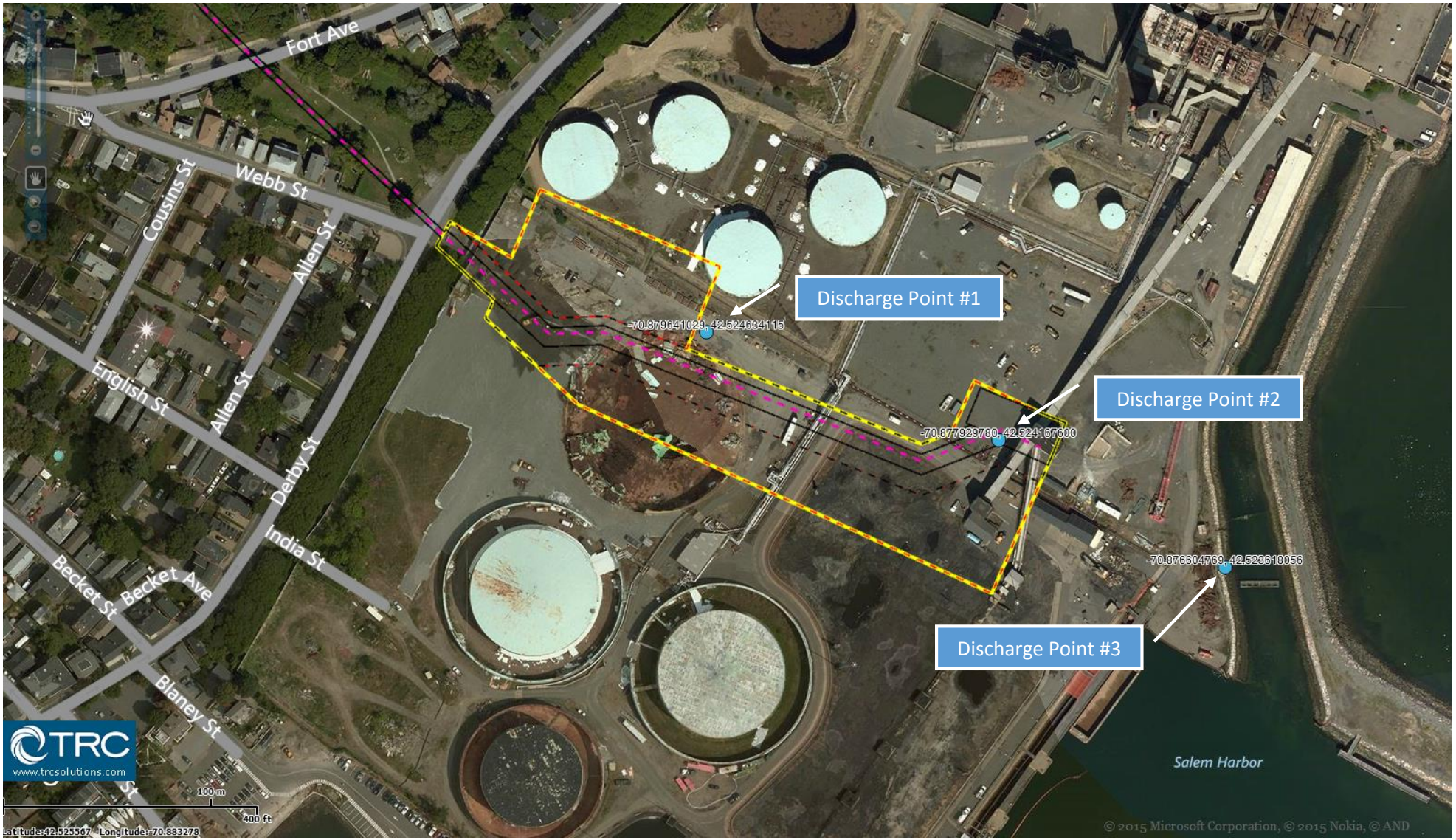

ATTACHMENT 5

Groundwater Treatment System Flow Diagram

SALEM LATERAL PROJECT

SALEM HARBOR STATION

EQUIPMENT LAYOUT AND PROCESS DIAGRAM

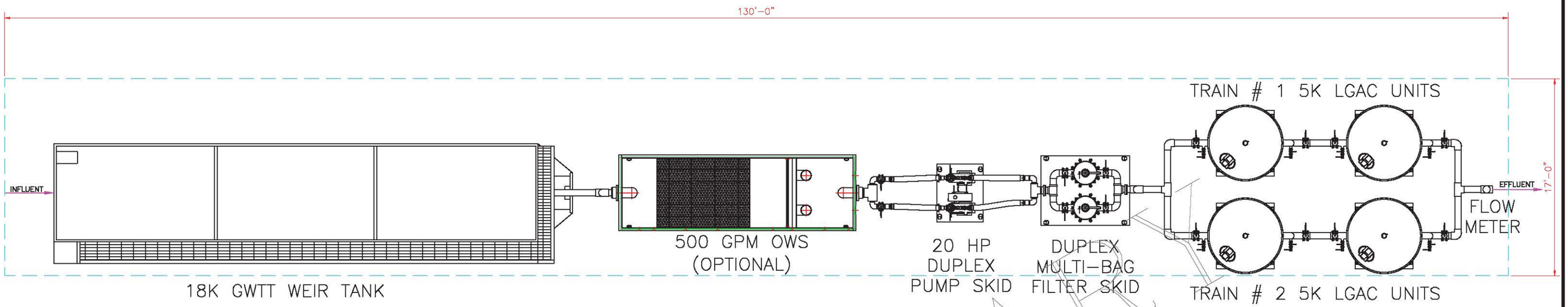

PLAN

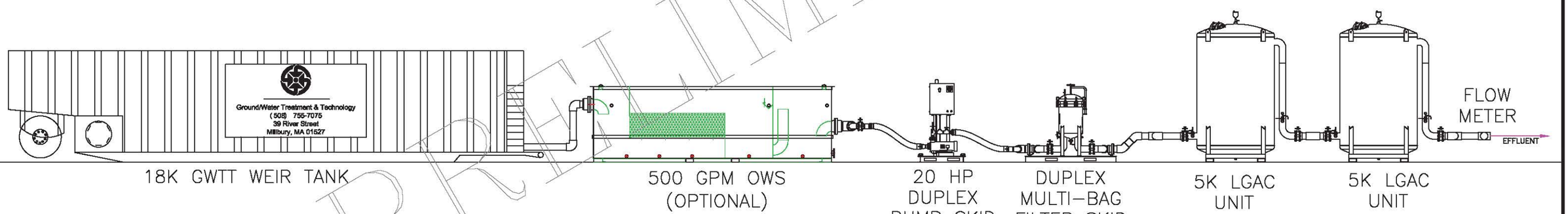

ELEVATION

PRELIMINARY

NO.	REVISIONS	DATE
A	FOR REVIEW	02/12/15

Salem Lateral Project - Salem, MA
500 GPM TEMPORARY TREATMENT SYSTEM
EQUIPMENT LAYOUT

SCALE: NTS	APPROVED BY: TJM	DRAWN BY: TLO
DATE: 02/11/15		

GROUND/WATER TREATMENT & TECHNOLOGY
39 RIVER STREET
MILLBURY, MA 01527

THIS DRAWING IS THE PROPERTY OF
GROUND/WATER TREATMENT & TECHNOLOGY, LLC

DWG SIZE: B	SHEET: 1 OF 1	DRAWING NUMBER: Q-6135-LYT	A

C:\Users\tlo\Documents\Work\11) TJ\Q-6135\Q-6135-LYT Rev-A 500 GPM Temporary Treatment System Layout.dwg

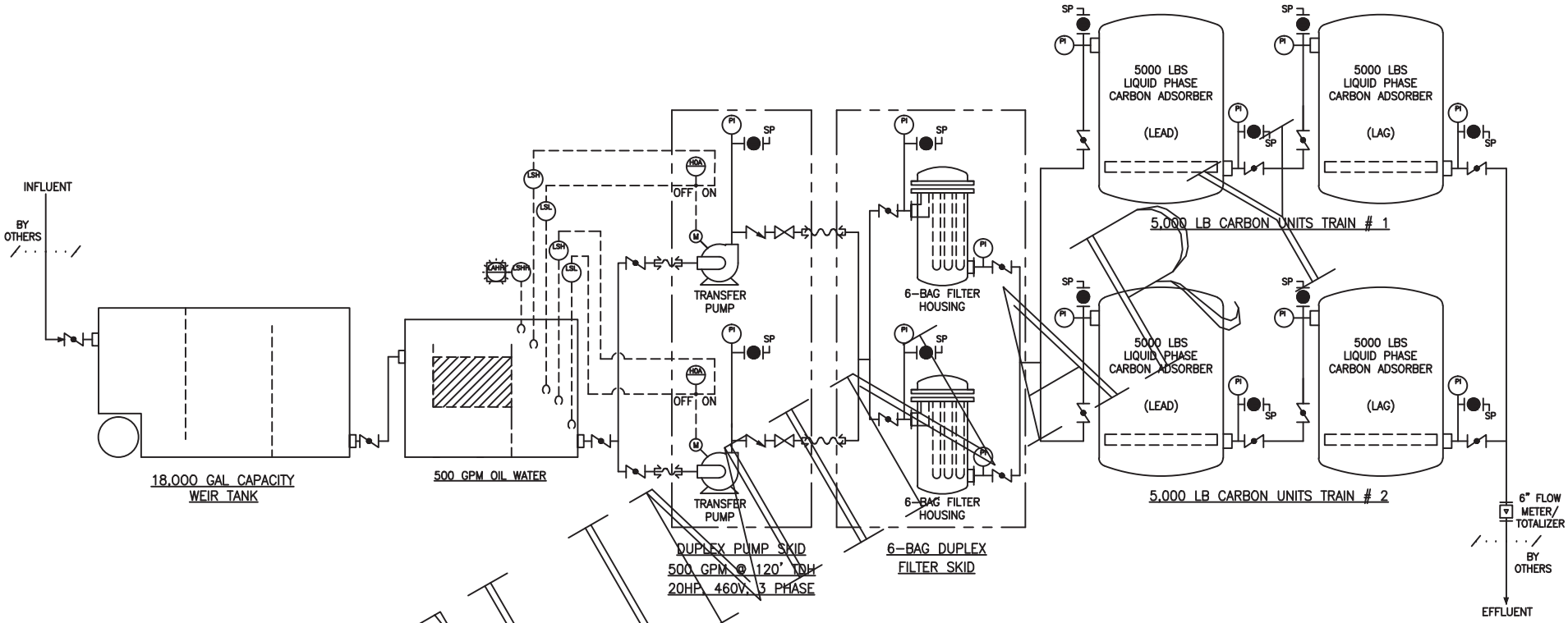

PRELIMINARY

LEGEND

- PROCESS PIPING
- FLEXIBLE HOSE
- FLOW DIRECTION
- PIPE CROSS OVER
- BALL VALVE (NORMALLY CLOSE)
- BUTTERFLY VALVE
- CHECK VALVE
- GATE VALVE (OPEN)
- SP SAMPLE PORT
- CAM LOCK COUPLING
- PI PRESSURE GAGE
- LEVEL FLOAT SWITCH
- M MOTOR
- FLOW METER
- LAHH LEVEL ALARM HIGH HIGH
- LSH LEVEL SWITCH HIGH
- LSHH LEVEL SWITCH HIGH HIGH
- LSL LEVEL SWITCH LOW
- HOA HAND/OFF/AUTO SWITCH

THIS DRAWING IS THE PROPERTY OF GROUND/WATER TREATMENT & TECHNOLOGY, LLC.

NOTES:
1) MAXIMUM FLOWRATE = 500 GPM
2) SYSTEM FOOTPRINT APPROX. 17' X 130'
3) NOT ALL VALVES, INSTRUMENTATION AND PIPING, ETC. SHOWN FOR CLARITY.
4) POWER REQUIREMENTS (BY OTHERS) – 460V, 3 PHASE, 70 AMPS.

NO.	REVISIONS	DATE
A	FOR REVIEW	02/12/15

Salem Lateral Project - Salem, MA
ESSEX COUNTY, SALEM, MA

500 GPM TEMPORARY TREATMENT SYSTEM
PROCESS & INSTRUMENTATION DIAGRAM

SCALE: NTS	APPROVED BY: JB	DRAWN BY: TLO	
DATE: 02/11/15			

GROUND/WATER TREATMENT & TECHNOLOGY
39 RIVER STREET
MILLBURY, MA 01527

DWG SIZE: A	SHEET: 1 OF 1	DRAWING NUMBER: Q-6135-PD	A

C:\Users\tlo\Documents\Work\11) TJ\Q-6135\Q-6135-PD Rev-A 500 GPM Temporary Treatment System.dwg

ATTACHMENT 6

Summary of Groundwater Analytical Results

Summary of Analytical Results for Groundwater Sample -- April 2015
Salem Lateral Project
Salem, Massachusetts

Analysis	Analyte	Sample ID:	TT-119C
		Sample Date:	4/1/2015
		RGP	**
VOCs			
(ug/L)	Methylene chloride	4.6	12 U^
	1,1-Dichloroethane	70	3.0 U
	Chloroform	NS	3.0 U
	Carbon tetrachloride	4.4	2.0 U
	1,2-Dichloropropane	NS	7.0 U
	Dibromochloromethane	NS	2.0 U
	1,1,2-Trichloroethane	5	3.0 U
	Tetrachloroethene	5	2.0 U
	Chlorobenzene	NS	2.0 U
	Trichlorofluoromethane	NS	10 U
	1,2-Dichloroethane	5	2.0 U
	1,1,1-Trichloroethane	200	2.0 U
	Bromodichloromethane	NS	2.0 U
	trans-1,3-Dichloropropene	NS	2.0 U
	cis-1,3-Dichloropropene	NS	2.0 U
	1,3-Dichloropropene, Total	NS	2.0 U
	1,1-Dichloropropene	NS	10 U
	Bromoform	NS	8.0 U
	1,1,2,2-Tetrachloroethane	NS	2.0 U
	Benzene*	5	2.0 U
	Toluene*	NS	3.0 U
	Ethylbenzene*	NS	2.0 U
	Chloromethane	NS	10 U
	Bromomethane	NS	4.0 U
	Vinyl chloride	2	4.0 U^
	Chloroethane	NS	4.0 U
	1,1-Dichloroethene	3.2	2.0 U
	trans-1,2-Dichloroethene	NS	3.0 U
	1,2-Dichloroethene, Total	NS	2.0 U
	Trichloroethene	5	2.0 U
	1,2-Dichlorobenzene	600	10 U
	1,3-Dichlorobenzene	320	10 U
	1,4-Dichlorobenzene	5	10 U^
	Methyl tert butyl ether	70	4.0 U
	p/m-Xylene	NS	4.0 U
	o-Xylene	NS	4.0 U
	Xylene (Total)*	NS	4.0 U
	cis-1,2-Dichloroethene	70	2.0 U
	Dibromomethane	NS	20 U
	1,4-Dichlorobutane	NS	20 U
	1,2,3-Trichloropropane	NS	20 U
	Styrene	NS	4.0 U
	Dichlorodifluoromethane	NS	20 U
	Acetone	NS	20 U
	Carbon disulfide	NS	20 U
	2-Butanone	NS	20 U
	Vinyl acetate	NS	20 U
	4-Methyl-2-pentanone	NS	20 U
	2-Hexanone	NS	20 U
	Ethyl methacrylate	NS	20 U
	Acrylonitrile	NS	20 U
	Bromochloromethane	NS	10 U
	Tetrahydrofuran	NS	20 U

Summary of Analytical Results for Groundwater Sample -- April 2015
Salem Lateral Project
Salem, Massachusetts

Analysis	Analyte	Sample ID:	TT-119C	
		Sample Date:	4/1/2015	
		RGP	**	
	2,2-Dichloropropane	NS	10	U
	1,2-Dibromoethane	0.05	0.010	U
	1,3-Dichloropropane	NS	10	U
	1,1,1,2-Tetrachloroethane	NS	2.0	U
	Bromobenzene	NS	10	U
	n-Butylbenzene	NS	2.0	U
	sec-Butylbenzene	NS	2.0	U
	tert-Butylbenzene	NS	10	U
	o-Chlorotoluene	NS	10	U
	p-Chlorotoluene	NS	10	U
	1,2-Dibromo-3-chloropropane	NS	0.010	U
	Hexachlorobutadiene	NS	2.0	U
	Isopropylbenzene	NS	2.0	U
	p-Isopropyltoluene	NS	2.0	U
	Naphthalene	20	10	U
	n-Propylbenzene	NS	2.0	U
	1,2,3-Trichlorobenzene	NS	10	U
	1,2,4-Trichlorobenzene	NS	10	U
	1,3,5-Trimethylbenzene	NS	10	U
	1,2,4-Trimethylbenzene	NS	10	U
	trans-1,4-Dichloro-2-butene	NS	10	U
	Ethyl ether	NS	10	U
	Tert-Butyl Alcohol	NS	40	U
	Tertiary-Amyl Methyl Ether	NS	8.0	U
	1,4-Dioxane	NS	12	U
	BTEX*	100	ND	
SVOCs				
(ug/L)	Benzidine	NS	200	U
	1,2,4-Trichlorobenzene	NS	50	U
	Bis(2-chloroethyl)ether	NS	20	U
	1,2-Dichlorobenzene	600	20	U
	1,3-Dichlorobenzene	320	20	U
	1,4-Dichlorobenzene	5	20	U^
	3,3'-Dichlorobenzidine	NS	50	U
	2,4-Dinitrotoluene	NS	50	U
	2,6-Dinitrotoluene	NS	50	U
	Azobenzene	NS	20	U
	4-Chlorophenyl phenyl ether	NS	20	U
	4-Bromophenyl phenyl ether	NS	20	U
	Bis(2-chloroisopropyl)ether	NS	20	U
	Bis(2-chloroethoxy)methane	NS	50	U
	Hexachlorocyclopentadiene	NS	200	U
	Isophorone	NS	50	U
	Nitrobenzene	NS	20	U
	NDPA/DPA	NS	20	U
	Bis(2-ethylhexyl)phthalate	6	30	U^
	Butyl benzyl phthalate	3[(a)]	50	U^
	Di-n-butylphthalate	3[(a)]	50	U^
	Di-n-octylphthalate	3[(a)]	50	U^
	Diethyl phthalate	3[(a)]	50	U^
	Dimethyl phthalate	3[(a)]	50	U^
	Aniline	NS	20	U
	4-Chloroaniline	NS	50	U
	2-Nitroaniline	NS	50	U

Summary of Analytical Results for Groundwater Sample -- April 2015
Salem Lateral Project
Salem, Massachusetts

Analysis	Analyte	Sample ID: / Sample Date:	TT-119C / 4/1/2015
		RGP	**
	3-Nitroaniline	NS	50 U
	4-Nitroaniline	NS	50 U
	Dibenzofuran	NS	20 U
	n-Nitrosodimethylamine	NS	20 U
	2,4,6-Trichlorophenol	300[(b)]	50 U
	p-Chloro-m-cresol	300[(b)]	20 U
	2-Chlorophenol	300[(b)]	20 U
	2,4-Dichlorophenol	300[(b)]	50 U
	2,4-Dimethylphenol	300[(b)]	50 U
	2-Nitrophenol	300[(b)]	100 U
	4-Nitrophenol	300[(b)]	100 U
	2,4-Dinitrophenol	300[(b)]	200 U
	4,6-Dinitro-o-cresol	NS	100 U
	Phenol	300[(b)]	50 U
	2-Methylphenol	300[(b)]	50 U
	3-Methylphenol/4-Methylphenol	NS	50 U
	2,4,5-Trichlorophenol	300[(b)]	50 U
	Benzoic Acid	NS	500 U
	Benzyl Alcohol	NS	20 U
	Carbazole	NS	20 U
	Pyridine	NS	50 U
PAHs			
(ug/L)	***Group I PAHs***		
	Benzo(a)anthracene	0.0038	**9.8**
	Benzo(a)pyrene	0.0038	8.0 U^
	Benzo(b)fluoranthene	0.0038	8.0 U^
	Benzo(k)fluoranthene	0.0038	8.0 U^
	Chrysene	0.0038	**8.6**
	Dibenzo(a,h)anthracene	0.0038	8.0 U^
	Indeno(1,2,3-cd)Pyrene	0.0038	8.0 U^
	Total Group I PAHs	10	***18.4***
	Group II PAHs		
	Acenaphthene	NS	8.0 U
	Fluoranthene	NS	**27**
	Naphthalene	20	8.0 U
	Acenaphthylene	NS	8.0 U
	Anthracene	NS	**15**
	Benzo(ghi)perylene	NS	8.0 U
	Fluorene	NS	8.0 U
	Phenanthrene	NS	**24**
	Pyrene	NS	**28**
	Total Group II PAHs	100	***94***
	2-Chloronaphthalene	NS	8.0 U
	Hexachlorobutadiene	NS	20 U
	1-Methylnaphthalene	NS	**24**
	2-Methylnaphthalene	NS	8.0 U
	Pentachlorophenol	1	32 U^
	Hexachlorobenzene	NS	32 U
	Hexachloroethane	NS	32 U
PCBs			
(ug/L)	Aroclor 1016	N/A	0.25 U
	Aroclor 1221	N/A	0.25 U
	Aroclor 1232	N/A	0.25 U

Summary of Analytical Results for Groundwater Sample -- April 2015
Salem Lateral Project
Salem, Massachusetts

Analysis	Analyte	Sample ID: / Sample Date:	TT-119C 4/1/2015
		RGP	**
	Aroclor 1242	N/A	0.25 U
	Aroclor 1248	N/A	0.25 U
	Aroclor 1254	N/A	0.25 U
	Aroclor 1260	N/A	0.20 U
	Total PCBs	0.000064	0.25 U^
Metals, total			
(ug/L)	Antimony	5.6	2.0 U
	Arsenic	36	**3.7**
	Cadmium	8.9	**0.30**
	Chromium	100	**19.1**
	Copper	37	**22.2**
	Iron	1,000	**6,600**
	Lead	8.5	**9.3**
	Mercury	1.1	0.20 U
	Nickel	8.2	**12.3**
	Selenium	71	5.0 U
	Silver	2.2	0.30 U
	Zinc	85.6	**389.7**
General Chemistry			
(ug/L)	Solids, Total Suspended	30,000	**66,000**
	Cyanide, Total	1	5.0 U^
	Chlorine, Total Residual	7.5	20 U^
	TPH	5,000	**119,000**
	Phenolics, Total	300	30 U
	Chromium, Hexavalent	50.3	10 U
	Chloride	NS	**24,300**

Notes:

ug/L - micrograms per liter.

N/A - Not applicable.

ND - Not detected.

NS - No criteria exist for this analyte.

U - Compound was not detected at specified quantitation limit.

Values in **Bold** indicate the compound was detected.

VOCs - Volatile Organic Compounds.

SVOCs - Semivolatile Organic Compounds.

PAHs - Polynuclear Aromatic Hydrocarbons.

PCBs - Polychlorinated Biphenyls.

TPH - Total Petroleum Hydrocarbons.

RGP - Remediation General Permit under the National Pollutant Discharge Elimination System (NPDES) for discharges in the Commonwealth of Massachusetts, Saltwater, 2010.

(a) - RGP for total phthalates used.

(b) - RGP limit for total phenols used.

^ - Quantitation limit value exceeds one or more of the listed criteria.

* - Sum of Benzene, Toluene, Ethylbenzene, and total Xylenes (BTEX).

** - Sample was re-collected for Total Residual Chlorine and Hexavalent Chromium analyses on 4/7/2015 due to invalid hold time for the original sample.

ATTACHMENT 7

Laboratory Data

ANALYTICAL REPORT

Lab Number:	L1506502
Client:	TRC Environmental Consultants Wannalancit Mills 650 Suffolk Street Lowell, MA 01854
ATTN:	Matt Oliveira
Phone:	(978) 656-3600
Project Name:	SPECTRA SALEM
Project Number:	140106
Report Date:	04/09/15

The original project report/data package is held by Alpha Analytical. This report/data package is paginated and should be reproduced only in its entirety. Alpha Analytical holds no responsibility for results and/or data that are not consistent with the original.

Certifications & Approvals: MA (M-MA086), NY (11148), CT (PH-0574), NH (2003), NJ NELAP (MA935), RI (LAO00065), ME (MA00086), PA (68-03671), VA (460195), MD (348), IL (200077), NC (666), TX (T104704476), DOD (L2217), USDA (Permit #P-330-11-00240).

Eight Walkup Drive, Westborough, MA 01581-1019
508-898-9220 (Fax) 508-898-9193 800-624-9220 - www.alphalab.com

Project Name: SPECTRA SALEM
Project Number: 140106

Lab Number: L1506502
Report Date: 04/09/15

Alpha Sample ID	Client ID	Matrix	Sample Location	Collection Date/Time	Receive Date
L1506502-01	TT-119C	WATER	SALEM, MA	04/01/15 13:30	04/02/15

Project Name: SPECTRA SALEM
Project Number: 140106
Lab Number: L1506502
Report Date: 04/09/15

Case Narrative

The samples were received in accordance with the Chain of Custody and no significant deviations were encountered during the preparation or analysis unless otherwise noted. Sample Receipt, Container Information, and the Chain of Custody are located at the back of the report.

Results contained within this report relate only to the samples submitted under this Alpha Lab Number and meet all of the requirements of NELAC, for all NELAC accredited parameters. The data presented in this report is organized by parameter (i.e. VOC, SVOC, etc.). Sample specific Quality Control data (i.e. Surrogate Spike Recovery) is reported at the end of the target analyte list for each individual sample, followed by the Laboratory Batch Quality Control at the end of each parameter. If a sample was re-analyzed or re-extracted due to a required quality control corrective action and if both sets of data are reported, the Laboratory ID of the re-analysis or re-extraction is designated with an "R" or "RE", respectively. When multiple Batch Quality Control elements are reported (e.g. more than one LCS), the associated samples for each element are noted in the grey shaded header line of each data table. Any Laboratory Batch, Sample Specific % recovery or RPD value that is outside the listed Acceptance Criteria is bolded in the report. All specific QC information is also incorporated in the Data Usability format of our Data Merger tool where it can be reviewed along with any associated usability implications. Soil/sediments, solids and tissues are reported on a dry weight basis unless otherwise noted. Definitions of all data qualifiers and acronyms used in this report are provided in the Glossary located at the back of the report.

In reference to questions H (CAM) or 4 (RCP) when "NO" is checked, the performance criteria for CAM and RCP methods allow for some quality control failures to occur and still be within method compliance. In these instances the specific failure is not narrated but noted in the associated QC table. The information is also incorporated in the Data Usability format of our Data Merger tool where it can be reviewed along with any associated usability implications.

Please see the associated ADEx data file for a comparison of laboratory reporting limits that were achieved with the regulatory Numerical Standards requested on the Chain of Custody.

HOLD POLICY
For samples submitted on hold, Alpha's policy is to hold samples (with the exception of Air canisters) free of charge for 21 calendar days from the date the project is completed. After 21 calendar days, we will dispose of all samples submitted including those put on hold unless you have contacted your Client Service Representative and made arrangements for Alpha to continue to hold the samples. Air canisters will be disposed after 3 business days from the date the project is completed.

Please contact Client Services at 800-624-9220 with any questions.

Project Name: SPECTRA SALEM **Lab Number:** L1506502
Project Number: 140106 **Report Date:** 04/09/15

Case Narrative (continued)

Volatile Organics

L1506502-01 has elevated detection limits due to the dilution required by the elevated concentrations of non-target compounds in the sample.

The WG774549-1 LCS recovery, associated with L1506502-01, is above the individual acceptance criteria for chloromethane (140%), but within the overall method allowances. The results of the associated sample are reported.

Volatile Organics by SIM

L1506502-01 has an elevated detection limit due to the dilution required by the elevated concentrations of non-target compounds in the sample.

Semivolatile Organics

L1506502-01 has elevated detection limits due to the dilution required by the sample matrix.

The surrogate recovery for the WG773849-1 Method Blank, associated with L1506502-01, is below the individual acceptance criteria for 2-fluorophenol (15%), but within the overall method allowances. The results of the original analysis are reported.

The WG773849-2 LCS recovery, associated with L1506502-01, is above the acceptance criteria for 2,4-dinitrotoluene (98%); however, the associated sample is non-detect for this target compound. The results of the original analysis are reported.

The WG773849-2/-3 LCS/LCSD RPD, associated with L1506502-01, is above the acceptance criteria for benzidine (35%).

Semivolatile Organics by SIM

L1506502-01 has elevated detection limits due to the dilution required by the sample matrix.

L1506502-01: The surrogate recoveries are below the acceptance criteria for 2-fluorophenol (0%), phenol-d6 (0%), nitrobenzene-d5 (0%), 2-fluorobiphenyl (0%), 2,4,6-tribromophenol (0%), and 4-terphenyl-d14 (0%) due to the dilution required to quantitate the sample. Re-extraction was not required; therefore, the results of the original analysis are reported.

Project Name: SPECTRA SALEM **Lab Number:** L1506502
Project Number: 140106 **Report Date:** 04/09/15

Case Narrative (continued)

Metals

The WG773190-4 MS recovery for iron (0%), performed on L1506502-01, does not apply because the sample concentration is greater than four times the spike amount added.

The WG773191-3 Laboratory Duplicate RPDs, performed on L1506502-01, are outside the acceptance criteria for cadmium (21%), copper (26%), lead (23%), and nickel (21%). The elevated RPDs have been attributed to the non-homogeneous nature of the sample utilized for the laboratory duplicate.

Solids, Total Suspended

L1506502-01 has an elevated detection limit due to the dilution required by the sample matrix.

Chlorine, Total Residual

L1506502-01 was analyzed with the method required holding time exceeded.

Chromium, Hexavalent

L1506502-01 was analyzed with the method required holding time exceeded.

TPH

The WG773257-3 MS recovery (169%), performed on L1506502-01, is outside the acceptance criteria; however, the associated LCS recovery is within overall method allowances. No further action was required.

WG773257: A laboratory duplicate could not be performed due to insufficient sample volume available for analysis.

I, the undersigned, attest under the pains and penalties of perjury that, to the best of my knowledge and belief and based upon my personal inquiry of those responsible for providing the information contained in this analytical report, such information is accurate and complete. This certificate of analysis is not complete unless this page accompanies any and all pages of this report.

Authorized Signature: Kelly Stenstrom

Title: Technical Director/Representative Date: 04/09/15

ORGANICS

VOLATILES

Project Name: SPECTRA SALEM
Project Number: 140106
Lab Number: L1506502
Report Date: 04/09/15

SAMPLE RESULTS

Lab ID:	L1506502-01	Date Collected:	04/01/15 13:30
Client ID:	TT-119C	Date Received:	04/02/15
Sample Location:	SALEM, MA	Field Prep:	Not Specified
Matrix:	Water		
Analytical Method:	14,504.1	Extraction Date:	04/03/15 11:00
Analytical Date:	04/03/15 16:54		
Analyst:	NS		

Parameter	Result	Qualifier	Units	RL	MDL	Dilution Factor	Column
Microextractables by GC - Westborough Lab							
1,2-Dibromoethane	ND		ug/l	0.010	--	1	A
1,2-Dibromo-3-chloropropane	ND		ug/l	0.010	--	1	A

Project Name: SPECTRA SALEM
Project Number: 140106
Lab Number: L1506502
Report Date: 04/09/15

SAMPLE RESULTS

Lab ID: L1506502-01 D
Client ID: TT-119C
Sample Location: SALEM, MA
Matrix: Water
Analytical Method: 1,8260C
Analytical Date: 04/08/15 14:22
Analyst: MM

Date Collected: 04/01/15 13:30
Date Received: 04/02/15
Field Prep: Not Specified

Parameter	Result	Qualifier	Units	RL	MDL	Dilution Factor
Volatile Organics by GC/MS - Westborough Lab						
Methylene chloride	ND		ug/l	12	--	4
1,1-Dichloroethane	ND		ug/l	3.0	--	4
Chloroform	ND		ug/l	3.0	--	4
Carbon tetrachloride	ND		ug/l	2.0	--	4
1,2-Dichloropropane	ND		ug/l	7.0	--	4
Dibromochloromethane	ND		ug/l	2.0	--	4
1,1,2-Trichloroethane	ND		ug/l	3.0	--	4
Tetrachloroethene	ND		ug/l	2.0	--	4
Chlorobenzene	ND		ug/l	2.0	--	4
Trichlorofluoromethane	ND		ug/l	10	--	4
1,2-Dichloroethane	ND		ug/l	2.0	--	4
1,1,1-Trichloroethane	ND		ug/l	2.0	--	4
Bromodichloromethane	ND		ug/l	2.0	--	4
trans-1,3-Dichloropropene	ND		ug/l	2.0	--	4
cis-1,3-Dichloropropene	ND		ug/l	2.0	--	4
1,3-Dichloropropene, Total	ND		ug/l	2.0	--	4
1,1-Dichloropropene	ND		ug/l	10	--	4
Bromoform	ND		ug/l	8.0	--	4
1,1,2,2-Tetrachloroethane	ND		ug/l	2.0	--	4
Benzene	ND		ug/l	2.0	--	4
Toluene	ND		ug/l	3.0	--	4
Ethylbenzene	ND		ug/l	2.0	--	4
Chloromethane	ND		ug/l	10	--	4
Bromomethane	ND		ug/l	4.0	--	4
Vinyl chloride	ND		ug/l	4.0	--	4
Chloroethane	ND		ug/l	4.0	--	4
1,1-Dichloroethene	ND		ug/l	2.0	--	4
trans-1,2-Dichloroethene	ND		ug/l	3.0	--	4
1,2-Dichloroethene, Total	ND		ug/l	2.0	--	4
Trichloroethene	ND		ug/l	2.0	--	4

Project Name: SPECTRA SALEM **Lab Number:** L1506502

Project Number: 140106 **Report Date:** 04/09/15

SAMPLE RESULTS

Lab ID: L1506502-01 D Date Collected: 04/01/15 13:30

Client ID: TT-119C Date Received: 04/02/15

Sample Location: SALEM, MA Field Prep: Not Specified

Parameter	Result	Qualifier	Units	RL	MDL	Dilution Factor
Volatile Organics by GC/MS - Westborough Lab						
1,2-Dichlorobenzene	ND		ug/l	10	--	4
1,3-Dichlorobenzene	ND		ug/l	10	--	4
1,4-Dichlorobenzene	ND		ug/l	10	--	4
Methyl tert butyl ether	ND		ug/l	4.0	--	4
p/m-Xylene	ND		ug/l	4.0	--	4
o-Xylene	ND		ug/l	4.0	--	4
Xylenes, Total	ND		ug/l	4.0	--	4
cis-1,2-Dichloroethene	ND		ug/l	2.0	--	4
Dibromomethane	ND		ug/l	20	--	4
1,4-Dichlorobutane	ND		ug/l	20	--	4
1,2,3-Trichloropropane	ND		ug/l	20	--	4
Styrene	ND		ug/l	4.0	--	4
Dichlorodifluoromethane	ND		ug/l	20	--	4
Acetone	ND		ug/l	20	--	4
Carbon disulfide	ND		ug/l	20	--	4
2-Butanone	ND		ug/l	20	--	4
Vinyl acetate	ND		ug/l	20	--	4
4-Methyl-2-pentanone	ND		ug/l	20	--	4
2-Hexanone	ND		ug/l	20	--	4
Ethyl methacrylate	ND		ug/l	20	--	4
Acrylonitrile	ND		ug/l	20	--	4
Bromochloromethane	ND		ug/l	10	--	4
Tetrahydrofuran	ND		ug/l	20	--	4
2,2-Dichloropropane	ND		ug/l	10	--	4
1,2-Dibromoethane	ND		ug/l	8.0	--	4
1,3-Dichloropropane	ND		ug/l	10	--	4
1,1,1,2-Tetrachloroethane	ND		ug/l	2.0	--	4
Bromobenzene	ND		ug/l	10	--	4
n-Butylbenzene	ND		ug/l	2.0	--	4
sec-Butylbenzene	ND		ug/l	2.0	--	4
tert-Butylbenzene	ND		ug/l	10	--	4
o-Chlorotoluene	ND		ug/l	10	--	4
p-Chlorotoluene	ND		ug/l	10	--	4
1,2-Dibromo-3-chloropropane	ND		ug/l	10	--	4
Hexachlorobutadiene	ND		ug/l	2.0	--	4
Isopropylbenzene	ND		ug/l	2.0	--	4
p-Isopropyltoluene	ND		ug/l	2.0	--	4
Naphthalene	ND		ug/l	10	--	4
n-Propylbenzene	ND		ug/l	2.0	--	4

Project Name: SPECTRA SALEM **Lab Number:** L1506502

Project Number: 140106 **Report Date:** 04/09/15

SAMPLE RESULTS

Lab ID: L1506502-01 D Date Collected: 04/01/15 13:30

Client ID: TT-119C Date Received: 04/02/15

Sample Location: SALEM, MA Field Prep: Not Specified

Parameter	Result	Qualifier	Units	RL	MDL	Dilution Factor
Volatile Organics by GC/MS - Westborough Lab						
1,2,3-Trichlorobenzene	ND		ug/l	10	--	4
1,2,4-Trichlorobenzene	ND		ug/l	10	--	4
1,3,5-Trimethylbenzene	ND		ug/l	10	--	4
1,2,4-Trimethylbenzene	ND		ug/l	10	--	4
trans-1,4-Dichloro-2-butene	ND		ug/l	10	--	4
Ethyl ether	ND		ug/l	10	--	4
Tert-Butyl Alcohol	ND		ug/l	40	--	4
Tertiary-Amyl Methyl Ether	ND		ug/l	8.0	--	4

Surrogate	% Recovery	Qualifier	Acceptance Criteria
1,2-Dichloroethane-d4	93		70-130
Toluene-d8	103		70-130
4-Bromofluorobenzene	99		70-130
Dibromofluoromethane	102		70-130

Project Name: SPECTRA SALEM
Project Number: 140106
Lab Number: L1506502
Report Date: 04/09/15

SAMPLE RESULTS

Lab ID: L1506502-01 D
Client ID: TT-119C
Sample Location: SALEM, MA
Matrix: Water
Analytical Method: 1,8260C-SIM(M)
Analytical Date: 04/08/15 14:22
Analyst: MM

Date Collected: 04/01/15 13:30
Date Received: 04/02/15
Field Prep: Not Specified

Parameter	Result	Qualifier	Units	RL	MDL	Dilution Factor
Volatile Organics by GC/MS-SIM - Westborough Lab						
1,4-Dioxane	ND		ug/l	12	--	4

Project Name: SPECTRA SALEM
Project Number: 140106

Lab Number: L1506502
Report Date: 04/09/15

Method Blank Analysis
Batch Quality Control

Analytical Method: 14,504.1
Analytical Date: 04/03/15 12:39
Analyst: NS

Extraction Date: 04/03/15 11:00

Parameter	Result	Qualifier	Units	RL	MDL	
Microextractables by GC - Westborough Lab for sample(s): 01 Batch: WG773277-1						
1,2-Dibromoethane	ND		ug/l	0.010	--	A
1,2-Dibromo-3-chloropropane	ND		ug/l	0.010	--	A

Project Name: SPECTRA SALEM
Project Number: 140106
Lab Number: L1506502
Report Date: 04/09/15

Method Blank Analysis
Batch Quality Control

Analytical Method: 1,8260C-SIM(M)
Analytical Date: 04/08/15 08:52
Analyst: MM

Parameter	Result	Qualifier	Units	RL	MDL
Volatile Organics by GC/MS-SIM - Westborough Lab for sample(s): 01 Batch: WG774367-3					
1,4-Dioxane	ND		ug/l	3.0	--

Project Name: SPECTRA SALEM **Lab Number:** L1506502

Project Number: 140106 **Report Date:** 04/09/15

Method Blank Analysis
Batch Quality Control

Analytical Method: 1,8260C
Analytical Date: 04/08/15 08:52
Analyst: MM

Parameter	Result	Qualifier	Units	RL	MDL
Volatile Organics by GC/MS - Westborough Lab for sample(s): 01 Batch: WG774549-3					
Methylene chloride	ND		ug/l	3.0	--
1,1-Dichloroethane	ND		ug/l	0.75	--
Chloroform	ND		ug/l	0.75	--
Carbon tetrachloride	ND		ug/l	0.50	--
1,2-Dichloropropane	ND		ug/l	1.8	--
Dibromochloromethane	ND		ug/l	0.50	--
1,1,2-Trichloroethane	ND		ug/l	0.75	--
2-Chloroethylvinyl ether	ND		ug/l	10	--
Tetrachloroethene	ND		ug/l	0.50	--
Chlorobenzene	ND		ug/l	0.50	--
Trichlorofluoromethane	ND		ug/l	2.5	--
1,2-Dichloroethane	ND		ug/l	0.50	--
1,1,1-Trichloroethane	ND		ug/l	0.50	--
Bromodichloromethane	ND		ug/l	0.50	--
trans-1,3-Dichloropropene	ND		ug/l	0.50	--
cis-1,3-Dichloropropene	ND		ug/l	0.50	--
1,3-Dichloropropene, Total	ND		ug/l	0.50	--
1,1-Dichloropropene	ND		ug/l	2.5	--
Bromoform	ND		ug/l	2.0	--
1,1,2,2-Tetrachloroethane	ND		ug/l	0.50	--
Benzene	ND		ug/l	0.50	--
Toluene	ND		ug/l	0.75	--
Ethylbenzene	ND		ug/l	0.50	--
Chloromethane	ND		ug/l	2.5	--
Bromomethane	ND		ug/l	1.0	--
Vinyl chloride	ND		ug/l	1.0	--
Chloroethane	ND		ug/l	1.0	--
1,1-Dichloroethene	ND		ug/l	0.50	--
trans-1,2-Dichloroethene	ND		ug/l	0.75	--

Project Name: SPECTRA SALEM **Lab Number:** L1506502

Project Number: 140106 **Report Date:** 04/09/15

Method Blank Analysis
Batch Quality Control

Analytical Method: 1,8260C
Analytical Date: 04/08/15 08:52
Analyst: MM

Parameter	Result	Qualifier	Units	RL	MDL
Volatile Organics by GC/MS - Westborough Lab for sample(s): 01 Batch: WG774549-3					
1,2-Dichloroethene, Total	ND		ug/l	0.50	--
Trichloroethene	ND		ug/l	0.50	--
1,2-Dichlorobenzene	ND		ug/l	2.5	--
1,3-Dichlorobenzene	ND		ug/l	2.5	--
1,4-Dichlorobenzene	ND		ug/l	2.5	--
Methyl tert butyl ether	ND		ug/l	1.0	--
p/m-Xylene	ND		ug/l	1.0	--
o-Xylene	ND		ug/l	1.0	--
Xylenes, Total	ND		ug/l	1.0	--
cis-1,2-Dichloroethene	ND		ug/l	0.50	--
Dibromomethane	ND		ug/l	5.0	--
1,4-Dichlorobutane	ND		ug/l	5.0	--
1,2,3-Trichloropropane	ND		ug/l	5.0	--
Styrene	ND		ug/l	1.0	--
Dichlorodifluoromethane	ND		ug/l	5.0	--
Acetone	ND		ug/l	5.0	--
Carbon disulfide	ND		ug/l	5.0	--
2-Butanone	ND		ug/l	5.0	--
Vinyl acetate	ND		ug/l	5.0	--
4-Methyl-2-pentanone	ND		ug/l	5.0	--
2-Hexanone	ND		ug/l	5.0	--
Ethyl methacrylate	ND		ug/l	5.0	--
Acrylonitrile	ND		ug/l	5.0	--
Bromochloromethane	ND		ug/l	2.5	--
Tetrahydrofuran	ND		ug/l	5.0	--
2,2-Dichloropropane	ND		ug/l	2.5	--
1,2-Dibromoethane	ND		ug/l	2.0	--
1,3-Dichloropropane	ND		ug/l	2.5	--
1,1,1,2-Tetrachloroethane	ND		ug/l	0.50	--

Project Name: SPECTRA SALEM
Project Number: 140106
Lab Number: L1506502
Report Date: 04/09/15

Method Blank Analysis
Batch Quality Control

Analytical Method: 1,8260C
Analytical Date: 04/08/15 08:52
Analyst: MM

Parameter	Result	Qualifier	Units	RL	MDL
Volatile Organics by GC/MS - Westborough Lab for sample(s): 01 Batch: WG774549-3					
Bromobenzene	ND		ug/l	2.5	--
n-Butylbenzene	ND		ug/l	0.50	--
sec-Butylbenzene	ND		ug/l	0.50	--
tert-Butylbenzene	ND		ug/l	2.5	--
o-Chlorotoluene	ND		ug/l	2.5	--
p-Chlorotoluene	ND		ug/l	2.5	--
1,2-Dibromo-3-chloropropane	ND		ug/l	2.5	--
Hexachlorobutadiene	ND		ug/l	0.50	--
Isopropylbenzene	ND		ug/l	0.50	--
p-Isopropyltoluene	ND		ug/l	0.50	--
Naphthalene	ND		ug/l	2.5	--
n-Propylbenzene	ND		ug/l	0.50	--
1,2,3-Trichlorobenzene	ND		ug/l	2.5	--
1,2,4-Trichlorobenzene	ND		ug/l	2.5	--
1,3,5-Trimethylbenzene	ND		ug/l	2.5	--
1,3,5-Trichlorobenzene	ND		ug/l	2.0	--
1,2,4-Trimethylbenzene	ND		ug/l	2.5	--
trans-1,4-Dichloro-2-butene	ND		ug/l	2.5	--
Ethyl ether	ND		ug/l	2.5	--
Methyl Acetate	ND		ug/l	10	--
Ethyl Acetate	ND		ug/l	10	--
Isopropyl Ether	ND		ug/l	2.0	--
Cyclohexane	ND		ug/l	10	--
Tert-Butyl Alcohol	ND		ug/l	10	--
Ethyl-Tert-Butyl-Ether	ND		ug/l	2.0	--
Tertiary-Amyl Methyl Ether	ND		ug/l	2.0	--
1,1,2-Trichloro-1,2,2-Trifluoroethane	ND		ug/l	10	--
Methyl cyclohexane	ND		ug/l	10	--
p-Diethylbenzene	ND		ug/l	2.0	--

Project Name: SPECTRA SALEM
Project Number: 140106
Lab Number: L1506502
Report Date: 04/09/15

Method Blank Analysis
Batch Quality Control

Analytical Method: 1,8260C
Analytical Date: 04/08/15 08:52
Analyst: MM

Parameter	Result	Qualifier	Units	RL	MDL
Volatile Organics by GC/MS - Westborough Lab for sample(s): 01 Batch: WG774549-3					
4-Ethyltoluene	ND		ug/l	2.0	--
1,2,4,5-Tetramethylbenzene	ND		ug/l	2.0	--

Surrogate	%Recovery	Qualifier	Acceptance Criteria
1,2-Dichloroethane-d4	95		70-130
Toluene-d8	102		70-130
4-Bromofluorobenzene	104		70-130
Dibromofluoromethane	100		70-130

Lab Control Sample Analysis

Batch Quality Control

Project Name: SPECTRA SALEM

Project Number: 140106

Lab Number: L1506502

Report Date: 04/09/15

Parameter	LCS %Recovery	Qual	LCSD %Recovery	Qual	%Recovery Limits	RPD	Qual	RPD Limits	Column
Microextractables by GC - Westborough Lab Associated sample(s): 01 Batch: WG773277-2									
1,2-Dibromoethane	97		-		70-130	-		20	A
1,2-Dibromo-3-chloropropane	109		-		70-130	-		20	A

Lab Control Sample Analysis

Batch Quality Control

Project Name: SPECTRA SALEM

Project Number: 140106

Lab Number: L1506502

Report Date: 04/09/15

Parameter	LCS %Recovery	Qual	LCSD %Recovery	Qual	%Recovery Limits	RPD	Qual	RPD Limits
Volatile Organics by GC/MS-SIM - Westborough Lab Associated sample(s): 01 Batch: WG774367-1 WG774367-2								
1,4-Dioxane	100		112		70-130	11		25

Lab Control Sample Analysis
Batch Quality Control

Project Name: SPECTRA SALEM
Project Number: 140106
Lab Number: L1506502
Report Date: 04/09/15

Parameter	LCS %Recovery	Qual	LCSD %Recovery	Qual	%Recovery Limits	RPD	Qual	RPD Limits
Volatile Organics by GC/MS - Westborough Lab Associated sample(s): 01 Batch: WG774549-1 WG774549-2								
Methylene chloride	84		81		70-130	4		20
1,1-Dichloroethane	93		92		70-130	1		20
Chloroform	91		91		70-130	0		20
Carbon tetrachloride	86		86		63-132	0		20
1,2-Dichloropropane	82		82		70-130	0		20
Dibromochloromethane	83		88		63-130	6		20
1,1,2-Trichloroethane	92		96		70-130	4		20
2-Chloroethylvinyl ether	78		73		70-130	7		20
Tetrachloroethene	95		99		70-130	4		20
Chlorobenzene	92		93		75-130	1		25
Trichlorofluoromethane	70		70		62-150	0		20
1,2-Dichloroethane	89		89		70-130	0		20
1,1,1-Trichloroethane	91		93		67-130	2		20
Bromodichloromethane	83		82		67-130	1		20
trans-1,3-Dichloropropene	88		92		70-130	4		20
cis-1,3-Dichloropropene	86		86		70-130	0		20
1,1-Dichloropropene	94		94		70-130	0		20
Bromoform	78		85		54-136	9		20
1,1,2,2-Tetrachloroethane	91		99		67-130	8		20
Benzene	92		92		70-130	0		25
Toluene	94		96		70-130	2		25

Lab Control Sample Analysis
Batch Quality Control

Project Name: SPECTRA SALEM
Project Number: 140106
Lab Number: L1506502
Report Date: 04/09/15

Parameter	LCS %Recovery	Qual	LCSD %Recovery	Qual	%Recovery Limits	RPD	Qual	RPD Limits
Volatile Organics by GC/MS - Westborough Lab Associated sample(s): 01 Batch: WG774549-1 WG774549-2								
Ethylbenzene	92		95		70-130	3		20
Chloromethane	**140**	Q	120		64-130	15		20
Bromomethane	81		79		39-139	3		20
Vinyl chloride	88		85		55-140	3		20
Chloroethane	77		76		55-138	1		20
1,1-Dichloroethene	80		82		61-145	2		25
trans-1,2-Dichloroethene	84		84		70-130	0		20
Trichloroethene	93		94		70-130	1		25
1,2-Dichlorobenzene	88		94		70-130	7		20
1,3-Dichlorobenzene	88		94		70-130	7		20
1,4-Dichlorobenzene	90		95		70-130	5		20
Methyl tert butyl ether	88		86		63-130	2		20
p/m-Xylene	93		95		70-130	2		20
o-Xylene	91		94		70-130	3		20
cis-1,2-Dichloroethene	96		94		70-130	2		20
Dibromomethane	85		83		70-130	2		20
1,4-Dichlorobutane	92		97		70-130	5		20
1,2,3-Trichloropropane	89		95		64-130	7		20
Styrene	90		93		70-130	3		20
Dichlorodifluoromethane	83		75		36-147	10		20
Acetone	64		67		58-148	5		20

Lab Control Sample Analysis
Batch Quality Control

Project Name: SPECTRA SALEM
Project Number: 140106
Lab Number: L1506502
Report Date: 04/09/15

Parameter	LCS %Recovery	Qual	LCSD %Recovery	Qual	%Recovery Limits	RPD	Qual	RPD Limits
Volatile Organics by GC/MS - Westborough Lab Associated sample(s): 01 Batch: WG774549-1 WG774549-2								
Carbon disulfide	71		73		51-130	3		20
2-Butanone	79		82		63-138	4		20
Vinyl acetate	82		81		70-130	1		20
4-Methyl-2-pentanone	104		110		59-130	6		20
2-Hexanone	95		100		57-130	5		20
Ethyl methacrylate	95		98		70-130	3		20
Acrylonitrile	95		94		70-130	1		20
Bromochloromethane	86		91		70-130	6		20
Tetrahydrofuran	98		102		58-130	4		20
2,2-Dichloropropane	91		91		63-133	0		20
1,2-Dibromoethane	90		93		70-130	3		20
1,3-Dichloropropane	93		95		70-130	2		20
1,1,1,2-Tetrachloroethane	85		88		64-130	3		20
Bromobenzene	91		99		70-130	8		20
n-Butylbenzene	86		90		53-136	5		20
sec-Butylbenzene	86		91		70-130	6		20
tert-Butylbenzene	89		94		70-130	5		20
o-Chlorotoluene	89		94		70-130	5		20
p-Chlorotoluene	88		95		70-130	8		20
1,2-Dibromo-3-chloropropane	74		85		41-144	14		20
Hexachlorobutadiene	99		108		63-130	9		20

Lab Control Sample Analysis
Batch Quality Control

Project Name: SPECTRA SALEM
Project Number: 140106
Lab Number: L1506502
Report Date: 04/09/15

Parameter	LCS %Recovery	Qual	LCSD %Recovery	Qual	%Recovery Limits	RPD	Qual	RPD Limits
Volatile Organics by GC/MS - Westborough Lab Associated sample(s): 01 Batch: WG774549-1 WG774549-2								
Isopropylbenzene	92		97		70-130	5		20
p-Isopropyltoluene	89		94		70-130	5		20
Naphthalene	84		94		70-130	11		20
n-Propylbenzene	89		95		69-130	7		20
1,2,3-Trichlorobenzene	89		99		70-130	11		20
1,2,4-Trichlorobenzene	94		101		70-130	7		20
1,3,5-Trimethylbenzene	87		96		64-130	10		20
1,3,5-Trichlorobenzene	93		99		70-130	6		20
1,2,4-Trimethylbenzene	90		94		70-130	4		20
trans-1,4-Dichloro-2-butene	88		95		70-130	8		20
Ethyl ether	81		78		59-134	4		20
Methyl Acetate	87		92		70-130	6		20
Ethyl Acetate	93		92		70-130	1		20
Isopropyl Ether	85		86		70-130	1		20
Cyclohexane	98		97		70-130	1		20
Tert-Butyl Alcohol	101		114		70-130	12		20
Ethyl-Tert-Butyl-Ether	86		86		70-130	0		20
Tertiary-Amyl Methyl Ether	86		87		66-130	1		20
1,1,2-Trichloro-1,2,2-Trifluoroethane	80		78		70-130	3		20
Methyl cyclohexane	93		94		70-130	1		20
p-Diethylbenzene	87		92		70-130	6		20

Lab Control Sample Analysis
Batch Quality Control

Project Name: SPECTRA SALEM
Project Number: 140106
Lab Number: L1506502
Report Date: 04/09/15

Parameter	LCS %Recovery	Qual	LCSD %Recovery	Qual	%Recovery Limits	RPD	Qual	RPD Limits
Volatile Organics by GC/MS - Westborough Lab Associated sample(s): 01 Batch: WG774549-1 WG774549-2								
4-Ethyltoluene	91		96		70-130	5		20
1,2,4,5-Tetramethylbenzene	89		96		70-130	8		20

Surrogate	LCS %Recovery	Qual	LCSD %Recovery	Qual	Acceptance Criteria
1,2-Dichloroethane-d4	93		93		70-130
Toluene-d8	101		101		70-130
4-Bromofluorobenzene	101		103		70-130
Dibromofluoromethane	94		96		70-130

Matrix Spike Analysis
Batch Quality Control

Project Name: SPECTRA SALEM
Project Number: 140106
Lab Number: L1506502
Report Date: 04/09/15

Parameter	Native Sample	MS Added	MS Found	MS %Recovery	Qual	MSD Found	MSD %Recovery	Qual	Recovery Limits	RPD	Qual	RPD Limits	Column
Microextractables by GC - Westborough Lab Associated sample(s): 01 QC Batch ID: WG773277-3 WG773277-4 QC Sample: L1506254-01 Client ID: MS Sample													
1,2-Dibromoethane	ND	0.251	0.248	98		0.252	99		70-130	2		20	A
1,2-Dibromo-3-chloropropane	ND	0.251	0.267	106		0.281	111		70-130	5		20	A

SEMIVOLATILES

Project Name: SPECTRA SALEM **Lab Number:** L1506502

Project Number: 140106 **Report Date:** 04/09/15

SAMPLE RESULTS

Lab ID:	L1506502-01	D	Date Collected:	04/01/15 13:30
Client ID:	TT-119C		Date Received:	04/02/15
Sample Location:	SALEM, MA		Field Prep:	Not Specified
Matrix:	Water		Extraction Method:	EPA 3510C
Analytical Method:	1,8270D		Extraction Date:	04/07/15 00:35
Analytical Date:	04/09/15 13:50			
Analyst:	RC			

Parameter	Result	Qualifier	Units	RL	MDL	Dilution Factor
Semivolatile Organics by GC/MS - Westborough Lab						
Benzidine	ND		ug/l	200	--	10
1,2,4-Trichlorobenzene	ND		ug/l	50	--	10
Bis(2-chloroethyl)ether	ND		ug/l	20	--	10
1,2-Dichlorobenzene	ND		ug/l	20	--	10
1,3-Dichlorobenzene	ND		ug/l	20	--	10
1,4-Dichlorobenzene	ND		ug/l	20	--	10
3,3'-Dichlorobenzidine	ND		ug/l	50	--	10
2,4-Dinitrotoluene	ND		ug/l	50	--	10
2,6-Dinitrotoluene	ND		ug/l	50	--	10
Azobenzene	ND		ug/l	20	--	10
4-Chlorophenyl phenyl ether	ND		ug/l	20	--	10
4-Bromophenyl phenyl ether	ND		ug/l	20	--	10
Bis(2-chloroisopropyl)ether	ND		ug/l	20	--	10
Bis(2-chloroethoxy)methane	ND		ug/l	50	--	10
Hexachlorocyclopentadiene	ND		ug/l	200	--	10
Isophorone	ND		ug/l	50	--	10
Nitrobenzene	ND		ug/l	20	--	10
NDPA/DPA	ND		ug/l	20	--	10
Bis(2-ethylhexyl)phthalate	ND		ug/l	30	--	10
Butyl benzyl phthalate	ND		ug/l	50	--	10
Di-n-butylphthalate	ND		ug/l	50	--	10
Di-n-octylphthalate	ND		ug/l	50	--	10
Diethyl phthalate	ND		ug/l	50	--	10
Dimethyl phthalate	ND		ug/l	50	--	10
Aniline	ND		ug/l	20	--	10
4-Chloroaniline	ND		ug/l	50	--	10
2-Nitroaniline	ND		ug/l	50	--	10
3-Nitroaniline	ND		ug/l	50	--	10
4-Nitroaniline	ND		ug/l	50	--	10
Dibenzofuran	ND		ug/l	20	--	10

Project Name: SPECTRA SALEM **Lab Number:** L1506502

Project Number: 140106 **Report Date:** 04/09/15

SAMPLE RESULTS

Lab ID: L1506502-01 D Date Collected: 04/01/15 13:30

Client ID: TT-119C Date Received: 04/02/15

Sample Location: SALEM, MA Field Prep: Not Specified

Parameter	Result	Qualifier	Units	RL	MDL	Dilution Factor
Semivolatile Organics by GC/MS - Westborough Lab						
n-Nitrosodimethylamine	ND		ug/l	20	--	10
2,4,6-Trichlorophenol	ND		ug/l	50	--	10
p-Chloro-m-cresol	ND		ug/l	20	--	10
2-Chlorophenol	ND		ug/l	20	--	10
2,4-Dichlorophenol	ND		ug/l	50	--	10
2,4-Dimethylphenol	ND		ug/l	50	--	10
2-Nitrophenol	ND		ug/l	100	--	10
4-Nitrophenol	ND		ug/l	100	--	10
2,4-Dinitrophenol	ND		ug/l	200	--	10
4,6-Dinitro-o-cresol	ND		ug/l	100	--	10
Phenol	ND		ug/l	50	--	10
2-Methylphenol	ND		ug/l	50	--	10
3-Methylphenol/4-Methylphenol	ND		ug/l	50	--	10
2,4,5-Trichlorophenol	ND		ug/l	50	--	10
Benzoic Acid	ND		ug/l	500	--	10
Benzyl Alcohol	ND		ug/l	20	--	10
Carbazole	ND		ug/l	20	--	10
Pyridine	ND		ug/l	50	--	10

Surrogate	% Recovery	Qualifier	Acceptance Criteria
2-Fluorophenol	35		21-120
Phenol-d6	24		10-120
Nitrobenzene-d5	114		23-120
2-Fluorobiphenyl	89		15-120
2,4,6-Tribromophenol	91		10-120
4-Terphenyl-d14	89		41-149

Project Name: SPECTRA SALEM
Project Number: 140106
Lab Number: L1506502
Report Date: 04/09/15

SAMPLE RESULTS

Lab ID: L1506502-01 D
Client ID: TT-119C
Sample Location: SALEM, MA
Matrix: Water
Analytical Method: 1,8270D-SIM
Analytical Date: 04/07/15 16:55
Analyst: MW

Date Collected: 04/01/15 13:30
Date Received: 04/02/15
Field Prep: Not Specified
Extraction Method: EPA 3510C
Extraction Date: 04/06/15 17:14

Parameter	Result	Qualifier	Units	RL	MDL	Dilution Factor
Semivolatile Organics by GC/MS-SIM - Westborough Lab						
Acenaphthene	ND		ug/l	8.0	--	40
2-Chloronaphthalene	ND		ug/l	8.0	--	40
Fluoranthene	27		ug/l	8.0	--	40
Hexachlorobutadiene	ND		ug/l	20	--	40
Naphthalene	ND		ug/l	8.0	--	40
Benzo(a)anthracene	9.8		ug/l	8.0	--	40
Benzo(a)pyrene	ND		ug/l	8.0	--	40
Benzo(b)fluoranthene	ND		ug/l	8.0	--	40
Benzo(k)fluoranthene	ND		ug/l	8.0	--	40
Chrysene	8.6		ug/l	8.0	--	40
Acenaphthylene	ND		ug/l	8.0	--	40
Anthracene	15		ug/l	8.0	--	40
Benzo(ghi)perylene	ND		ug/l	8.0	--	40
Fluorene	ND		ug/l	8.0	--	40
Phenanthrene	24		ug/l	8.0	--	40
Dibenzo(a,h)anthracene	ND		ug/l	8.0	--	40
Indeno(1,2,3-cd)Pyrene	ND		ug/l	8.0	--	40
Pyrene	28		ug/l	8.0	--	40
1-Methylnaphthalene	24		ug/l	8.0	--	40
2-Methylnaphthalene	ND		ug/l	8.0	--	40
Pentachlorophenol	ND		ug/l	32	--	40
Hexachlorobenzene	ND		ug/l	32	--	40
Hexachloroethane	ND		ug/l	32	--	40

Project Name: SPECTRA SALEM **Lab Number:** L1506502

Project Number: 140106 **Report Date:** 04/09/15

SAMPLE RESULTS

Lab ID: L1506502-01 D Date Collected: 04/01/15 13:30

Client ID: TT-119C Date Received: 04/02/15

Sample Location: SALEM, MA Field Prep: Not Specified

Parameter	Result	Qualifier	Units	RL	MDL	Dilution Factor

Semivolatile Organics by GC/MS-SIM - Westborough Lab

Surrogate	% Recovery	Qualifier	Acceptance Criteria
2-Fluorophenol	**0**	Q	21-120
Phenol-d6	**0**	Q	10-120
Nitrobenzene-d5	**0**	Q	23-120
2-Fluorobiphenyl	**0**	Q	15-120
2,4,6-Tribromophenol	**0**	Q	10-120
4-Terphenyl-d14	**0**	Q	41-149

Project Name: SPECTRA SALEM
Project Number: 140106

Lab Number: L1506502
Report Date: 04/09/15

Method Blank Analysis
Batch Quality Control

Analytical Method: 1,8270D-SIM
Analytical Date: 04/07/15 12:25
Analyst: MW

Extraction Method: EPA 3510C
Extraction Date: 04/06/15 17:14

Parameter	Result	Qualifier	Units	RL	MDL
Semivolatile Organics by GC/MS-SIM - Westborough Lab for sample(s): 01 Batch: WG773791-1					
Acenaphthene	ND		ug/l	0.20	--
2-Chloronaphthalene	ND		ug/l	0.20	--
Fluoranthene	ND		ug/l	0.20	--
Hexachlorobutadiene	ND		ug/l	0.50	--
Naphthalene	ND		ug/l	0.20	--
Benzo(a)anthracene	ND		ug/l	0.20	--
Benzo(a)pyrene	ND		ug/l	0.20	--
Benzo(b)fluoranthene	ND		ug/l	0.20	--
Benzo(k)fluoranthene	ND		ug/l	0.20	--
Chrysene	ND		ug/l	0.20	--
Acenaphthylene	ND		ug/l	0.20	--
Anthracene	ND		ug/l	0.20	--
Benzo(ghi)perylene	ND		ug/l	0.20	--
Fluorene	ND		ug/l	0.20	--
Phenanthrene	ND		ug/l	0.20	--
Dibenzo(a,h)anthracene	ND		ug/l	0.20	--
Indeno(1,2,3-cd)Pyrene	ND		ug/l	0.20	--
Pyrene	ND		ug/l	0.20	--
1-Methylnaphthalene	ND		ug/l	0.20	--
2-Methylnaphthalene	ND		ug/l	0.20	--
Pentachlorophenol	ND		ug/l	0.80	--
Hexachlorobenzene	ND		ug/l	0.80	--
Hexachloroethane	ND		ug/l	0.80	--

Project Name: SPECTRA SALEM
Project Number: 140106

Lab Number: L1506502
Report Date: 04/09/15

Method Blank Analysis
Batch Quality Control

Analytical Method: 1,8270D-SIM
Analytical Date: 04/07/15 12:25
Analyst: MW

Extraction Method: EPA 3510C
Extraction Date: 04/06/15 17:14

Parameter	Result	Qualifier	Units	RL	MDL
Semivolatile Organics by GC/MS-SIM - Westborough Lab for sample(s): 01 Batch: WG773791-1					

Surrogate	%Recovery	Qualifier	Acceptance Criteria
2-Fluorophenol	42		21-120
Phenol-d6	31		10-120
Nitrobenzene-d5	57		23-120
2-Fluorobiphenyl	56		15-120
2,4,6-Tribromophenol	71		10-120
4-Terphenyl-d14	54		41-149

Project Name: SPECTRA SALEM
Project Number: 140106
Lab Number: L1506502
Report Date: 04/09/15

Method Blank Analysis
Batch Quality Control

Analytical Method: 1,8270D
Analytical Date: 04/09/15 12:26
Analyst: RC

Extraction Method: EPA 3510C
Extraction Date: 04/07/15 00:35

Parameter	Result	Qualifier	Units	RL	MDL
Semivolatile Organics by GC/MS - Westborough Lab for sample(s): 01 Batch: WG773849-1					
Benzidine	ND		ug/l	20	--
1,2,4-Trichlorobenzene	ND		ug/l	5.0	--
Bis(2-chloroethyl)ether	ND		ug/l	2.0	--
1,2-Dichlorobenzene	ND		ug/l	2.0	--
1,3-Dichlorobenzene	ND		ug/l	2.0	--
1,4-Dichlorobenzene	ND		ug/l	2.0	--
3,3'-Dichlorobenzidine	ND		ug/l	5.0	--
2,4-Dinitrotoluene	ND		ug/l	5.0	--
2,6-Dinitrotoluene	ND		ug/l	5.0	--
Azobenzene	ND		ug/l	2.0	--
4-Chlorophenyl phenyl ether	ND		ug/l	2.0	--
4-Bromophenyl phenyl ether	ND		ug/l	2.0	--
Bis(2-chloroisopropyl)ether	ND		ug/l	2.0	--
Bis(2-chloroethoxy)methane	ND		ug/l	5.0	--
Hexachlorocyclopentadiene	ND		ug/l	20	--
Isophorone	ND		ug/l	5.0	--
Nitrobenzene	ND		ug/l	2.0	--
NDPA/DPA	ND		ug/l	2.0	--
Bis(2-ethylhexyl)phthalate	ND		ug/l	3.0	--
Butyl benzyl phthalate	ND		ug/l	5.0	--
Di-n-butylphthalate	ND		ug/l	5.0	--
Di-n-octylphthalate	ND		ug/l	5.0	--
Diethyl phthalate	ND		ug/l	5.0	--
Dimethyl phthalate	ND		ug/l	5.0	--
Aniline	ND		ug/l	2.0	--
4-Chloroaniline	ND		ug/l	5.0	--
2-Nitroaniline	ND		ug/l	5.0	--
3-Nitroaniline	ND		ug/l	5.0	--
4-Nitroaniline	ND		ug/l	5.0	--

Project Name: SPECTRA SALEM
Project Number: 140106
Lab Number: L1506502
Report Date: 04/09/15

Method Blank Analysis
Batch Quality Control

Analytical Method: 1,8270D
Analytical Date: 04/09/15 12:26
Analyst: RC

Extraction Method: EPA 3510C
Extraction Date: 04/07/15 00:35

Parameter	Result	Qualifier	Units	RL	MDL
Semivolatile Organics by GC/MS - Westborough Lab for sample(s): 01 Batch: WG773849-1					
Dibenzofuran	ND		ug/l	2.0	--
n-Nitrosodimethylamine	ND		ug/l	2.0	--
2,4,6-Trichlorophenol	ND		ug/l	5.0	--
p-Chloro-m-cresol	ND		ug/l	2.0	--
2-Chlorophenol	ND		ug/l	2.0	--
2,4-Dichlorophenol	ND		ug/l	5.0	--
2,4-Dimethylphenol	ND		ug/l	5.0	--
2-Nitrophenol	ND		ug/l	10	--
4-Nitrophenol	ND		ug/l	10	--
2,4-Dinitrophenol	ND		ug/l	20	--
4,6-Dinitro-o-cresol	ND		ug/l	10	--
Phenol	ND		ug/l	5.0	--
2-Methylphenol	ND		ug/l	5.0	--
3-Methylphenol/4-Methylphenol	ND		ug/l	5.0	--
2,4,5-Trichlorophenol	ND		ug/l	5.0	--
Benzoic Acid	ND		ug/l	50	--
Benzyl Alcohol	ND		ug/l	2.0	--
Carbazole	ND		ug/l	2.0	--
Pyridine	ND		ug/l	5.0	--

Surrogate	%Recovery	Qualifier	Acceptance Criteria
2-Fluorophenol	**15**	Q	21-120
Phenol-d6	12		10-120
Nitrobenzene-d5	33		23-120
2-Fluorobiphenyl	42		15-120
2,4,6-Tribromophenol	65		10-120
4-Terphenyl-d14	79		41-149

Lab Control Sample Analysis
Batch Quality Control

Project Name: SPECTRA SALEM
Project Number: 140106
Lab Number: L1506502
Report Date: 04/09/15

Parameter	LCS %Recovery	Qual	LCSD %Recovery	Qual	%Recovery Limits	RPD	Qual	RPD Limits
Semivolatile Organics by GC/MS-SIM - Westborough Lab Associated sample(s): 01 Batch: WG773791-2 WG773791-3								
Acenaphthene	73		72		37-111	1		40
2-Chloronaphthalene	81		80		40-140	1		40
Fluoranthene	80		76		40-140	5		40
Hexachlorobutadiene	65		65		40-140	0		40
Naphthalene	73		72		40-140	1		40
Benzo(a)anthracene	83		82		40-140	1		40
Benzo(a)pyrene	82		81		40-140	1		40
Benzo(b)fluoranthene	85		83		40-140	2		40
Benzo(k)fluoranthene	77		75		40-140	3		40
Chrysene	76		75		40-140	1		40
Acenaphthylene	80		81		40-140	1		40
Anthracene	75		74		40-140	1		40
Benzo(ghi)perylene	80		72		40-140	11		40
Fluorene	80		82		40-140	2		40
Phenanthrene	73		72		40-140	1		40
Dibenzo(a,h)anthracene	81		73		40-140	10		40
Indeno(1,2,3-cd)Pyrene	81		72		40-140	12		40
Pyrene	80		75		26-127	6		40
1-Methylnaphthalene	76		75		40-140	1		40
2-Methylnaphthalene	82		81		40-140	1		40
Pentachlorophenol	67		64		9-103	5		40

Lab Control Sample Analysis
Batch Quality Control

Project Name: SPECTRA SALEM
Project Number: 140106
Lab Number: L1506502
Report Date: 04/09/15

Parameter	LCS %Recovery	Qual	LCSD %Recovery	Qual	%Recovery Limits	RPD	Qual	RPD Limits
Semivolatile Organics by GC/MS-SIM - Westborough Lab Associated sample(s): 01 Batch: WG773791-2 WG773791-3								
Hexachlorobenzene	74		73		40-140	1		40
Hexachloroethane	67		67		40-140	0		40

Surrogate	LCS %Recovery	Qual	LCSD %Recovery	Qual	Acceptance Criteria
2-Fluorophenol	54		54		21-120
Phenol-d6	41		41		10-120
Nitrobenzene-d5	74		74		23-120
2-Fluorobiphenyl	77		75		15-120
2,4,6-Tribromophenol	92		93		10-120
4-Terphenyl-d14	70		65		41-149

Lab Control Sample Analysis
Batch Quality Control

Project Name: SPECTRA SALEM
Project Number: 140106
Lab Number: L1506502
Report Date: 04/09/15

Parameter	LCS %Recovery	Qual	LCSD %Recovery	Qual	%Recovery Limits	RPD	Qual	RPD Limits
Semivolatile Organics by GC/MS - Westborough Lab Associated sample(s): 01 Batch: WG773849-2 WG773849-3								
Benzidine	35		50		10-75	**35**	Q	30
1,2,4-Trichlorobenzene	60		51		39-98	16		30
Bis(2-chloroethyl)ether	75		64		40-140	16		30
1,2-Dichlorobenzene	59		52		40-140	13		30
1,3-Dichlorobenzene	55		49		40-140	12		30
1,4-Dichlorobenzene	56		49		36-97	13		30
3,3'-Dichlorobenzidine	75		72		40-140	4		30
2,4-Dinitrotoluene	**98**	Q	82		24-96	18		30
2,6-Dinitrotoluene	101		85		40-140	17		30
Azobenzene	80		68		40-140	16		30
4-Chlorophenyl phenyl ether	84		70		40-140	18		30
4-Bromophenyl phenyl ether	85		71		40-140	18		30
Bis(2-chloroisopropyl)ether	69		58		40-140	17		30
Bis(2-chloroethoxy)methane	83		71		40-140	16		30
Hexachlorocyclopentadiene	42		42		40-140	0		30
Isophorone	82		70		40-140	16		30
Nitrobenzene	77		65		40-140	17		30
NDPA/DPA	82		69		40-140	17		30
Bis(2-ethylhexyl)phthalate	90		73		40-140	21		30
Butyl benzyl phthalate	91		72		40-140	23		30
Di-n-butylphthalate	86		71		40-140	19		30

Lab Control Sample Analysis
Batch Quality Control

Project Name: SPECTRA SALEM
Project Number: 140106
Lab Number: L1506502
Report Date: 04/09/15

Parameter	LCS %Recovery	Qual	LCSD %Recovery	Qual	%Recovery Limits	RPD	Qual	RPD Limits
Semivolatile Organics by GC/MS - Westborough Lab Associated sample(s): 01 Batch: WG773849-2 WG773849-3								
Di-n-octylphthalate	90		71		40-140	24		30
Diethyl phthalate	85		70		40-140	19		30
Dimethyl phthalate	86		72		40-140	18		30
Aniline	43		41		40-140	5		30
4-Chloroaniline	57		56		40-140	2		30
2-Nitroaniline	95		80		52-143	17		30
3-Nitroaniline	64		61		25-145	5		30
4-Nitroaniline	91		76		51-143	18		30
Dibenzofuran	81		69		40-140	16		30
n-Nitrosodimethylamine	36		31		22-74	15		30
2,4,6-Trichlorophenol	85		71		30-130	18		30
p-Chloro-m-cresol	80		66		23-97	19		30
2-Chlorophenol	66		57		27-123	15		30
2,4-Dichlorophenol	81		67		30-130	19		30
2,4-Dimethylphenol	76		64		30-130	17		30
2-Nitrophenol	91		77		30-130	17		30
4-Nitrophenol	42		33		10-80	24		30
2,4-Dinitrophenol	99		80		20-130	21		30
4,6-Dinitro-o-cresol	96		82		20-164	16		30
Phenol	30		25		12-110	18		30
2-Methylphenol	60		50		30-130	18		30

Lab Control Sample Analysis
Batch Quality Control

Project Name: SPECTRA SALEM
Project Number: 140106
Lab Number: L1506502
Report Date: 04/09/15

Parameter	LCS %Recovery	Qual	LCSD %Recovery	Qual	%Recovery Limits	RPD	Qual	RPD Limits
Semivolatile Organics by GC/MS - Westborough Lab Associated sample(s): 01 Batch: WG773849-2 WG773849-3								
3-Methylphenol/4-Methylphenol	57		49		30-130	15		30
2,4,5-Trichlorophenol	90		75		30-130	18		30
Benzoic Acid	35		28		10-164	22		30
Benzyl Alcohol	55		46		26-116	18		30
Carbazole	85		71		55-144	18		30
Pyridine	26		26		10-66	0		30

Surrogate	LCS %Recovery	Qual	LCSD %Recovery	Qual	Acceptance Criteria
2-Fluorophenol	40		34		21-120
Phenol-d6	28		24		10-120
Nitrobenzene-d5	83		70		23-120
2-Fluorobiphenyl	84		70		15-120
2,4,6-Tribromophenol	89		75		10-120
4-Terphenyl-d14	85		69		41-149

PCBS

Project Name: SPECTRA SALEM
Project Number: 140106
Lab Number: L1506502
Report Date: 04/09/15

SAMPLE RESULTS

Lab ID:	L1506502-01	Date Collected:	04/01/15 13:30
Client ID:	TT-119C	Date Received:	04/02/15
Sample Location:	SALEM, MA	Field Prep:	Not Specified
Matrix:	Water	Extraction Method:	EPA 608
Analytical Method:	5,608	Extraction Date:	04/06/15 14:15
Analytical Date:	04/07/15 04:42	Cleanup Method:	EPA 3665A
Analyst:	JT	Cleanup Date:	04/06/15
		Cleanup Method:	EPA 3660B
		Cleanup Date:	04/06/15

Parameter	Result	Qualifier	Units	RL	MDL	Dilution Factor	Column
Polychlorinated Biphenyls by GC - Westborough Lab							
Aroclor 1016	ND		ug/l	0.250	--	1	B
Aroclor 1221	ND		ug/l	0.250	--	1	B
Aroclor 1232	ND		ug/l	0.250	--	1	B
Aroclor 1242	ND		ug/l	0.250	--	1	B
Aroclor 1248	ND		ug/l	0.250	--	1	B
Aroclor 1254	ND		ug/l	0.250	--	1	B
Aroclor 1260	ND		ug/l	0.200	--	1	B

Surrogate	% Recovery	Qualifier	Acceptance Criteria	Column
2,4,5,6-Tetrachloro-m-xylene	59		30-150	B
Decachlorobiphenyl	97		30-150	B

Project Name: SPECTRA SALEM

Project Number: 140106

Lab Number: L1506502

Report Date: 04/09/15

Method Blank Analysis
Batch Quality Control

Analytical Method: 5,608
Analytical Date: 04/07/15 05:44
Analyst: JT

Extraction Method: EPA 608
Extraction Date: 04/06/15 14:15
Cleanup Method: EPA 3665A
Cleanup Date: 04/06/15
Cleanup Method: EPA 3660B
Cleanup Date: 04/06/15

Parameter	Result	Qualifier	Units	RL	MDL	Column
Polychlorinated Biphenyls by GC - Westborough Lab for sample(s): 01 Batch: WG773739-1						
Aroclor 1016	ND		ug/l	0.250	--	B
Aroclor 1221	ND		ug/l	0.250	--	B
Aroclor 1232	ND		ug/l	0.250	--	B
Aroclor 1242	ND		ug/l	0.250	--	B
Aroclor 1248	ND		ug/l	0.250	--	B
Aroclor 1254	ND		ug/l	0.250	--	B
Aroclor 1260	ND		ug/l	0.200	--	B

Surrogate	%Recovery	Qualifier	Acceptance Criteria	Column
2,4,5,6-Tetrachloro-m-xylene	62		30-150	B
Decachlorobiphenyl	71		30-150	B

Matrix Spike Analysis
Batch Quality Control

Project Name: SPECTRA SALEM
Project Number: 140106
Lab Number: L1506502
Report Date: 04/09/15

Parameter	Native Sample	MS Added	MS Found	MS %Recovery	Qual	MSD Found	MSD %Recovery	Qual	Recovery Limits	RPD	Qual	RPD Limits	Column
Polychlorinated Biphenyls by GC - Westborough Lab Associated sample(s): 01 QC Batch ID: WG773739-3 QC Sample: L1506531-01 Client ID: MS Sample													
Aroclor 1016	ND	1	0.585	58		-	-		40-140	-		50	B
Aroclor 1260	ND	1	0.448	45		-	-		40-140	-		50	B

Surrogate	MS % Recovery	MS Qualifier	MSD % Recovery	MSD Qualifier	Acceptance Criteria	Column
2,4,5,6-Tetrachloro-m-xylene	55				30-150	B
Decachlorobiphenyl	47				30-150	B

Lab Control Sample Analysis
Batch Quality Control

Project Name: SPECTRA SALEM
Project Number: 140106
Lab Number: L1506502
Report Date: 04/09/15

Parameter	LCS %Recovery	Qual	LCSD %Recovery	Qual	%Recovery Limits	RPD	Qual	RPD Limits	Column
Polychlorinated Biphenyls by GC - Westborough Lab Associated sample(s): 01 Batch: WG773739-2									
Aroclor 1016	74		-		40-140	-		50	B
Aroclor 1260	79		-		40-140	-		50	B

Surrogate	LCS %Recovery	Qual	LCSD %Recovery	Qual	Acceptance Criteria	Column
2,4,5,6-Tetrachloro-m-xylene	64				30-150	B
Decachlorobiphenyl	71				30-150	B

Lab Duplicate Analysis
Batch Quality Control

Project Name: SPECTRA SALEM
Project Number: 140106

Lab Number: L1506502
Report Date: 04/09/15

Parameter	Native Sample	Duplicate Sample	Units	RPD	Qual	RPD Limits	
Polychlorinated Biphenyls by GC - Westborough Lab Associated sample(s): 01 QC Batch ID: WG773739-4 QC Sample: L1506421-08 Client ID: DUP Sample							
Aroclor 1016	ND	ND	ug/l	NC		50	B
Aroclor 1221	ND	ND	ug/l	NC		50	B
Aroclor 1232	ND	ND	ug/l	NC		50	B
Aroclor 1242	ND	ND	ug/l	NC		50	B
Aroclor 1248	ND	ND	ug/l	NC		50	B
Aroclor 1254	ND	ND	ug/l	NC		50	B
Aroclor 1260	ND	ND	ug/l	NC		50	B

Surrogate	%Recovery	Qualifier	%Recovery	Qualifier	Acceptance Criteria	Column
2,4,5,6-Tetrachloro-m-xylene	71		72		30-150	B
Decachlorobiphenyl	64		64		30-150	B

METALS

Project Name:	SPECTRA SALEM	**Lab Number:**	L1506502
Project Number:	140106	**Report Date:**	04/09/15

SAMPLE RESULTS

Lab ID:	L1506502-01	Date Collected:	04/01/15 13:30
Client ID:	TT-119C	Date Received:	04/02/15
Sample Location:	SALEM, MA	Field Prep:	Not Specified
Matrix:	Water		

Parameter	Result	Qualifier	Units	RL	MDL	Dilution Factor	Date Prepared	Date Analyzed	Prep Method	Analytical Method	Analyst
Total Metals - Westborough Lab											
Antimony, Total	ND		mg/l	0.0020	--	1	04/03/15 09:00	04/06/15 14:29	EPA 3005A	1,6020A	BM
Arsenic, Total	0.0037		mg/l	0.0005	--	1	04/03/15 09:00	04/06/15 14:29	EPA 3005A	1,6020A	BM
Cadmium, Total	0.0003		mg/l	0.0002	--	1	04/03/15 09:00	04/06/15 14:29	EPA 3005A	1,6020A	BM
Chromium, Total	0.0191		mg/l	0.0010	--	1	04/03/15 09:00	04/06/15 14:29	EPA 3005A	1,6020A	BM
Copper, Total	0.0222		mg/l	0.0010	--	1	04/03/15 09:00	04/06/15 14:29	EPA 3005A	1,6020A	BM
Iron, Total	6.6		mg/l	0.05	--	1	04/03/15 10:27	04/03/15 17:29	EPA 3005A	19,200.7	TT
Lead, Total	0.0093		mg/l	0.0005	--	1	04/03/15 09:00	04/06/15 14:29	EPA 3005A	1,6020A	BM
Mercury, Total	ND		mg/l	0.00020	--	1	04/03/15 09:55	04/03/15 16:22	EPA 245.1	3,245.1	AB
Nickel, Total	0.0123		mg/l	0.0005	--	1	04/03/15 09:00	04/06/15 14:29	EPA 3005A	1,6020A	BM
Selenium, Total	ND		mg/l	0.005	--	1	04/03/15 09:00	04/06/15 14:29	EPA 3005A	1,6020A	BM
Silver, Total	ND		mg/l	0.0003	--	1	04/03/15 09:00	04/06/15 14:29	EPA 3005A	1,6020A	BM
Zinc, Total	0.3897		mg/l	0.0100	--	1	04/03/15 09:00	04/06/15 14:29	EPA 3005A	1,6020A	BM

Project Name: SPECTRA SALEM **Lab Number:** L1506502

Project Number: 140106 **Report Date:** 04/09/15

Method Blank Analysis
Batch Quality Control

Parameter	Result	Qualifier	Units	RL	MDL	Dilution Factor	Date Prepared	Date Analyzed	Analytical Method	Analyst
Total Metals - Westborough Lab for sample(s): 01 Batch: WG773190-1										
Iron, Total	ND		mg/l	0.05	--	1	04/03/15 10:27	04/03/15 17:02	19,200.7	TT

Prep Information

Digestion Method: EPA 3005A

Parameter	Result	Qualifier	Units	RL	MDL	Dilution Factor	Date Prepared	Date Analyzed	Analytical Method	Analyst
Total Metals - Westborough Lab for sample(s): 01 Batch: WG773191-1										
Antimony, Total	ND		mg/l	0.0020	--	1	04/03/15 09:00	04/06/15 14:23	1,6020A	BM
Arsenic, Total	ND		mg/l	0.0005	--	1	04/03/15 09:00	04/06/15 14:23	1,6020A	BM
Cadmium, Total	ND		mg/l	0.0002	--	1	04/03/15 09:00	04/06/15 14:23	1,6020A	BM
Chromium, Total	ND		mg/l	0.0010	--	1	04/03/15 09:00	04/06/15 14:23	1,6020A	BM
Copper, Total	ND		mg/l	0.0010	--	1	04/03/15 09:00	04/06/15 14:23	1,6020A	BM
Lead, Total	ND		mg/l	0.0005	--	1	04/03/15 09:00	04/06/15 14:23	1,6020A	BM
Nickel, Total	ND		mg/l	0.0005	--	1	04/03/15 09:00	04/06/15 14:23	1,6020A	BM
Selenium, Total	ND		mg/l	0.005	--	1	04/03/15 09:00	04/06/15 14:23	1,6020A	BM
Silver, Total	ND		mg/l	0.0003	--	1	04/03/15 09:00	04/06/15 14:23	1,6020A	BM
Zinc, Total	ND		mg/l	0.0100	--	1	04/03/15 09:00	04/06/15 14:23	1,6020A	BM

Prep Information

Digestion Method: EPA 3005A

Parameter	Result	Qualifier	Units	RL	MDL	Dilution Factor	Date Prepared	Date Analyzed	Analytical Method	Analyst
Total Metals - Westborough Lab for sample(s): 01 Batch: WG773225-1										
Mercury, Total	ND		mg/l	0.00020	--	1	04/03/15 09:55	04/03/15 16:19	3,245.1	AB

Prep Information

Digestion Method: EPA 245.1

Lab Control Sample Analysis
Batch Quality Control

Project Name: SPECTRA SALEM
Project Number: 140106
Lab Number: L1506502
Report Date: 04/09/15

Parameter	LCS %Recovery	Qual	LCSD %Recovery	Qual	%Recovery Limits	RPD	Qual	RPD Limits
Total Metals - Westborough Lab Associated sample(s): 01 Batch: WG773190-2								
Iron, Total	94		-		85-115	-		
Total Metals - Westborough Lab Associated sample(s): 01 Batch: WG773191-2								
Antimony, Total	112		-		80-120	-		
Arsenic, Total	113		-		80-120	-		
Cadmium, Total	116		-		80-120	-		
Chromium, Total	110		-		80-120	-		
Copper, Total	112		-		80-120	-		
Lead, Total	116		-		80-120	-		
Nickel, Total	110		-		80-120	-		
Selenium, Total	118		-		80-120	-		
Silver, Total	107		-		80-120	-		
Zinc, Total	114		-		80-120	-		
Total Metals - Westborough Lab Associated sample(s): 01 Batch: WG773225-2								
Mercury, Total	112		-		85-115	-		

Matrix Spike Analysis
Batch Quality Control

Project Name: SPECTRA SALEM
Project Number: 140106
Lab Number: L1506502
Report Date: 04/09/15

Parameter	Native Sample	MS Added	MS Found	MS %Recovery	Qual	MSD Found	MSD %Recovery	Qual	Recovery Limits	RPD	Qual	RPD Limits
Total Metals - Westborough Lab Associated sample(s): 01 QC Batch ID: WG773190-4 QC Sample: L1506502-01 Client ID: TT-119C												
Iron, Total	6.6	1	6.0	**0**	Q	-	-		75-125	-		20
Total Metals - Westborough Lab Associated sample(s): 01 QC Batch ID: WG773191-4 QC Sample: L1506502-01 Client ID: TT-119C												
Antimony, Total	ND	0.5	0.5398	108		-	-		75-125	-		20
Arsenic, Total	0.0037	0.12	0.1218	98		-	-		75-125	-		20
Cadmium, Total	0.0003	0.051	0.0550	107		-	-		75-125	-		20
Chromium, Total	0.0191	0.2	0.2144	98		-	-		75-125	-		20
Copper, Total	0.0222	0.25	0.2825	104		-	-		75-125	-		20
Lead, Total	0.0093	0.51	0.5408	104		-	-		75-125	-		20
Nickel, Total	0.0123	0.5	0.5190	101		-	-		75-125	-		20
Selenium, Total	ND	0.12	0.105	88		-	-		75-125	-		20
Silver, Total	ND	0.05	0.0510	102		-	-		75-125	-		20
Zinc, Total	0.3897	0.5	0.8962	101		-	-		75-125	-		20
Total Metals - Westborough Lab Associated sample(s): 01 QC Batch ID: WG773225-4 QC Sample: L1506502-01 Client ID: TT-119C												
Mercury, Total	ND	0.005	0.00519	104		-	-		70-130	-		20

Lab Duplicate Analysis
Batch Quality Control

Project Name: SPECTRA SALEM
Project Number: 140106

Lab Number: L1506502
Report Date: 04/09/15

Parameter	Native Sample	Duplicate Sample	Units	RPD	Qual	RPD Limits
Total Metals - Westborough Lab Associated sample(s): 01 QC Batch ID: WG773190-3 QC Sample: L1506502-01 Client ID: TT-119C						
Iron, Total	6.6	5.6	mg/l	16		20
Total Metals - Westborough Lab Associated sample(s): 01 QC Batch ID: WG773191-3 QC Sample: L1506502-01 Client ID: TT-119C						
Antimony, Total	ND	ND	mg/l	NC		20
Arsenic, Total	0.0037	0.0033	mg/l	11		20
Cadmium, Total	0.0003	0.0003	mg/l	**21**	Q	20
Chromium, Total	0.0191	0.0194	mg/l	2		20
Copper, Total	0.0222	0.0171	mg/l	**26**	Q	20
Lead, Total	0.0093	0.0074	mg/l	**23**	Q	20
Nickel, Total	0.0123	0.0099	mg/l	**21**	Q	20
Selenium, Total	ND	ND	mg/l	NC		20
Silver, Total	ND	ND	mg/l	NC		20
Zinc, Total	0.3897	0.3556	mg/l	9		20
Total Metals - Westborough Lab Associated sample(s): 01 QC Batch ID: WG773225-3 QC Sample: L1506502-01 Client ID: TT-119C						
Mercury, Total	ND	ND	mg/l	NC		20

INORGANICS
&
MISCELLANEOUS

Project Name: SPECTRA SALEM
Project Number: 140106

Lab Number: L1506502
Report Date: 04/09/15

SAMPLE RESULTS

Lab ID: L1506502-01
Client ID: TT-119C
Sample Location: SALEM, MA
Matrix: Water

Date Collected: 04/01/15 13:30
Date Received: 04/02/15
Field Prep: Not Specified

Parameter	Result	Qualifier	Units	RL	MDL	Dilution Factor	Date Prepared	Date Analyzed	Analytical Method	Analyst
General Chemistry - Westborough Lab										
Solids, Total Suspended	66.		mg/l	15	NA	3	-	04/03/15 14:00	30,2540D	DW
Cyanide, Total	ND		mg/l	0.005	--	1	04/03/15 10:42	04/03/15 14:00	30,4500CN-CE	ML
Chlorine, Total Residual	ND		mg/l	0.02	--	1	-	04/02/15 21:37	30,4500CL-D	MR
TPH	119.		mg/l	4.40	--	1.1	04/03/15 11:15	04/08/15 15:35	74,1664A	JO
Phenolics, Total	ND		mg/l	0.030	--	1	04/06/15 10:30	04/06/15 14:11	4,420.1	MP
Chromium, Hexavalent	ND		mg/l	0.010	--	1	04/02/15 21:50	04/02/15 22:01	30,3500CR-B	MR
Anions by Ion Chromatography - Westborough Lab										
Chloride	24.3		mg/l	0.500	--	1	-	04/03/15 00:34	44,300.0	AU

Project Name: SPECTRA SALEM **Lab Number:** L1506502

Project Number: 140106 **Report Date:** 04/09/15

Method Blank Analysis
Batch Quality Control

Parameter	Result	Qualifier	Units	RL	MDL	Dilution Factor	Date Prepared	Date Analyzed	Analytical Method	Analyst
General Chemistry - Westborough Lab for sample(s): 01 Batch: WG773102-1										
Chlorine, Total Residual	ND		mg/l	0.02	--	1	-	04/02/15 21:37	30,4500CL-D	MR
General Chemistry - Westborough Lab for sample(s): 01 Batch: WG773103-1										
Chromium, Hexavalent	ND		mg/l	0.010	--	1	04/02/15 21:50	04/02/15 22:01	30,3500CR-B	MR
General Chemistry - Westborough Lab for sample(s): 01 Batch: WG773181-1										
Solids, Total Suspended	ND		mg/l	5.0	NA	1	-	04/03/15 14:00	30,2540D	DW
General Chemistry - Westborough Lab for sample(s): 01 Batch: WG773247-1										
Cyanide, Total	ND		mg/l	0.005	--	1	04/03/15 10:42	04/03/15 13:47	30,4500CN-CE	ML
General Chemistry - Westborough Lab for sample(s): 01 Batch: WG773257-1										
TPH	ND		mg/l	4.00	--	1	04/03/15 11:15	04/08/15 15:35	74,1664A	JO
Anions by Ion Chromatography - Westborough Lab for sample(s): 01 Batch: WG773417-1										
Chloride	ND		mg/l	0.500	--	1	-	04/02/15 19:46	44,300.0	AU
General Chemistry - Westborough Lab for sample(s): 01 Batch: WG773706-1										
Phenolics, Total	ND		mg/l	0.030	--	1	04/06/15 10:30	04/06/15 14:09	4,420.1	MP

Lab Control Sample Analysis
Batch Quality Control

Project Name: SPECTRA SALEM
Project Number: 140106
Lab Number: L1506502
Report Date: 04/09/15

Parameter	LCS %Recovery	Qual	LCSD %Recovery	Qual	%Recovery Limits	RPD	Qual	RPD Limits
General Chemistry - Westborough Lab Associated sample(s): 01 Batch: WG773102-2								
Chlorine, Total Residual	101		-		90-110	-		
General Chemistry - Westborough Lab Associated sample(s): 01 Batch: WG773103-2								
Chromium, Hexavalent	97		-		85-115	-		20
General Chemistry - Westborough Lab Associated sample(s): 01 Batch: WG773247-2								
Cyanide, Total	107		-		90-110	-		
General Chemistry - Westborough Lab Associated sample(s): 01 Batch: WG773257-2								
TPH	85		-		64-132	-		34
Anions by Ion Chromatography - Westborough Lab Associated sample(s): 01 Batch: WG773417-2								
Chloride	102		-		90-110	-		
General Chemistry - Westborough Lab Associated sample(s): 01 Batch: WG773706-2								
Phenolics, Total	90		-		70-130	-		

Matrix Spike Analysis
Batch Quality Control

Project Name: SPECTRA SALEM
Project Number: 140106
Lab Number: L1506502
Report Date: 04/09/15

Parameter	Native Sample	MS Added	MS Found	MS %Recovery	Qual	MSD Found	MSD %Recovery	Qual	Recovery Limits	RPD	Qual	RPD Limits
General Chemistry - Westborough Lab Associated sample(s): 01 QC Batch ID: WG773103-4 QC Sample: L1506502-01 Client ID: TT-119C												
Chromium, Hexavalent	ND	0.1	0.105	105		-	-		85-115	-		20
General Chemistry - Westborough Lab Associated sample(s): 01 QC Batch ID: WG773247-4 QC Sample: L1506502-01 Client ID: TT-119C												
Cyanide, Total	ND	0.2	0.199	100		-	-		90-110	-		30
General Chemistry - Westborough Lab Associated sample(s): 01 QC Batch ID: WG773257-3 QC Sample: L1506502-01 Client ID: TT-119C												
TPH	119	22.2	157	**169**	Q	-	-		64-132	-		34
Anions by Ion Chromatography - Westborough Lab Associated sample(s): 01 QC Batch ID: WG773417-3 QC Sample: L1506502-01 Client ID: TT-119C												
Chloride	24.3	4	27.5	80		-	-		40-151	-		18
General Chemistry - Westborough Lab Associated sample(s): 01 QC Batch ID: WG773706-4 QC Sample: L1506502-01 Client ID: TT-119C												
Phenolics, Total	ND	0.4	0.38	96		-	-		70-130	-		20

Lab Duplicate Analysis
Batch Quality Control

Project Name: SPECTRA SALEM
Project Number: 140106

Lab Number: L1506502
Report Date: 04/09/15

Parameter	Native Sample	Duplicate Sample	Units	RPD	Qual	RPD Limits
General Chemistry - Westborough Lab Associated sample(s): 01 QC Batch ID: WG773102-3 QC Sample: L1506502-01 Client ID: TT-119C						
Chlorine, Total Residual	ND	ND	mg/l	NC		20
General Chemistry - Westborough Lab Associated sample(s): 01 QC Batch ID: WG773103-3 QC Sample: L1506502-01 Client ID: TT-119C						
Chromium, Hexavalent	ND	ND	mg/l	NC		20
General Chemistry - Westborough Lab Associated sample(s): 01 QC Batch ID: WG773181-2 QC Sample: L1506502-01 Client ID: TT-119C						
Solids, Total Suspended	66	66	mg/l	0		29
General Chemistry - Westborough Lab Associated sample(s): 01 QC Batch ID: WG773247-3 QC Sample: L1506502-01 Client ID: TT-119C						
Cyanide, Total	ND	ND	mg/l	NC		30
Anions by Ion Chromatography - Westborough Lab Associated sample(s): 01 QC Batch ID: WG773417-4 QC Sample: L1506502-01 Client ID: TT-119C						
Chloride	24.3	24.3	mg/l	0		18
General Chemistry - Westborough Lab Associated sample(s): 01 QC Batch ID: WG773706-3 QC Sample: L1506502-01 Client ID: TT-119C						
Phenolics, Total	ND	ND	mg/l	NC		20

Project Name: SPECTRA SALEM
Project Number: 140106

Lab Number: L1506502
Report Date: 04/09/15

Sample Receipt and Container Information

Were project specific reporting limits specified? YES

Reagent H2O Preserved Vials Frozen on: NA

Cooler Information Custody Seal

Cooler	
A	Absent

Container Information

Container ID	Container Type	Cooler	pH	Temp deg C	Pres	Seal	Analysis(*)
L1506502-01A	Vial HCl preserved	A	N/A	5.5	Y	Absent	8260(14)
L1506502-01B	Vial HCl preserved	A	N/A	5.5	Y	Absent	8260(14)
L1506502-01C	Vial HCl preserved	A	N/A	5.5	Y	Absent	8260(14)
L1506502-01D	Vial HCl preserved	A	N/A	5.5	Y	Absent	8260-SIM(14)
L1506502-01E	Vial HCl preserved	A	N/A	5.5	Y	Absent	8260-SIM(14)
L1506502-01F	Vial HCl preserved	A	N/A	5.5	Y	Absent	8260-SIM(14)
L1506502-01G	Vial Na2S2O3 preserved	A	N/A	5.5	Y	Absent	504(14)
L1506502-01H	Vial Na2S2O3 preserved	A	N/A	5.5	Y	Absent	504(14)
L1506502-01J	Plastic 250ml HNO3 preserved	A	<2	5.5	Y	Absent	SE-6020T(180),CR-6020T(180),NI-6020T(180),CU-6020T(180),ZN-6020T(180),FE-UI(180),PB-6020T(180),HG-U(28),AS-6020T(180),SB-6020T(180),AG-6020T(180),CD-6020T(180)
L1506502-01J1	Plastic 250ml NaOH preserved	A	>12	5.5	Y	Absent	TCN-4500(14)
L1506502-01K	Plastic 950ml unpreserved	A	7	5.5	Y	Absent	TSS-2540(7)
L1506502-01L	Plastic 950ml unpreserved	A	7	5.5	Y	Absent	CL-300(28),HEXCR-3500(1),TRC-4500(1)
L1506502-01M	Amber 1000ml Na2S2O3	A	7	5.5	Y	Absent	PCB-608(7)
L1506502-01N	Amber 1000ml Na2S2O3	A	7	5.5	Y	Absent	PCB-608(7)
L1506502-01O	Amber 950ml H2SO4 preserved	A	<2	5.5	Y	Absent	TPHENOL-420(28)
L1506502-01P	Amber 1000ml HCl preserved	A	N/A	5.5	Y	Absent	TPH-1664(28)
L1506502-01Q	Amber 1000ml HCl preserved	A	N/A	5.5	Y	Absent	TPH-1664(28)
L1506502-01R	Amber 1000ml unpreserved	A	7	5.5	Y	Absent	8270TCL(7),8270TCL-SIM(7)
L1506502-01S	Amber 1000ml unpreserved	A	7	5.5	Y	Absent	8270TCL(7),8270TCL-SIM(7)

*Values in parentheses indicate holding time in days

Project Name:	SPECTRA SALEM	**Lab Number:**	L1506502
Project Number:	140106	**Report Date:**	04/09/15

GLOSSARY

Acronyms

EDL	- Estimated Detection Limit: This value represents the level to which target analyte concentrations are reported as estimated values, when those target analyte concentrations are quantified below the reporting limit (RL). The EDL includes any adjustments from dilutions, concentrations or moisture content, where applicable. The use of EDLs is specific to the analysis of PAHs using Solid-Phase Microextraction (SPME).
EPA	- Environmental Protection Agency.
LCS	- Laboratory Control Sample: A sample matrix, free from the analytes of interest, spiked with verified known amounts of analytes or a material containing known and verified amounts of analytes.
LCSD	- Laboratory Control Sample Duplicate: Refer to LCS.
LFB	- Laboratory Fortified Blank: A sample matrix, free from the analytes of interest, spiked with verified known amounts of analytes or a material containing known and verified amounts of analytes.
MDL	- Method Detection Limit: This value represents the level to which target analyte concentrations are reported as estimated values, when those target analyte concentrations are quantified below the reporting limit (RL). The MDL includes any adjustments from dilutions, concentrations or moisture content, where applicable.
MS	- Matrix Spike Sample: A sample prepared by adding a known mass of target analyte to a specified amount of matrix sample for which an independent estimate of target analyte concentration is available.
MSD	- Matrix Spike Sample Duplicate: Refer to MS.
NA	- Not Applicable.
NC	- Not Calculated: Term is utilized when one or more of the results utilized in the calculation are non-detect at the parameter's reporting unit.
NI	- Not Ignitable.
RL	- Reporting Limit: The value at which an instrument can accurately measure an analyte at a specific concentration. The RL includes any adjustments from dilutions, concentrations or moisture content, where applicable.
RPD	- Relative Percent Difference: The results from matrix and/or matrix spike duplicates are primarily designed to assess the precision of analytical results in a given matrix and are expressed as relative percent difference (RPD). Values which are less than five times the reporting limit for any individual parameter are evaluated by utilizing the absolute difference between the values; although the RPD value will be provided in the report.
SRM	- Standard Reference Material: A reference sample of a known or certified value that is of the same or similar matrix as the associated field samples.

Footnotes

1	- The reference for this analyte should be considered modified since this analyte is absent from the target analyte list of the original method.

Terms

Total: With respect to Organic analyses, a 'Total' result is defined as the summation of results for individual isomers or Aroclors. If a 'Total' result is requested, the results of its individual components will also be reported. This is applicable to 'Total' results for methods 8260, 8081 and 8082.

Analytical Method: Both the document from which the method originates and the analytical reference method. (Example: EPA 8260B is shown as 1,8260B.) The codes for the reference method documents are provided in the References section of the Addendum.

Data Qualifiers

A	- Spectra identified as "Aldol Condensation Product".
B	- The analyte was detected above the reporting limit in the associated method blank. Flag only applies to associated field samples that have detectable concentrations of the analyte at less than ten times (10x) the concentration found in the blank. For MCP-related projects, flag only applies to associated field samples that have detectable concentrations of the analyte at less than ten times (10x) the concentration found in the blank. For DOD-related projects, flag only applies to associated field samples that have detectable concentrations of the analyte at less than ten times (10x) the concentration found in the blank AND the analyte was detected above one-half the reporting limit (or above the reporting limit for common lab contaminants) in the associated method blank. For NJ-Air-related projects, flag only applies to associated field samples that have detectable concentrations of the analyte above the reporting limit. For NJ-related projects (excluding Air), flag only applies to associated field samples that have detectable concentrations of the analyte, which was detected above the reporting limit in the associated method blank or above five times the reporting limit for common lab contaminants (Phthalates, Acetone, Methylene Chloride, 2-Butanone).
C	- Co-elution: The target analyte co-elutes with a known lab standard (i.e. surrogate, internal standards, etc.) for co-extracted analyses.
D	- Concentration of analyte was quantified from diluted analysis. Flag only applies to field samples that have detectable concentrations of the analyte.
E	- Concentration of analyte exceeds the range of the calibration curve and/or linear range of the instrument.

Report Format: Data Usability Report

Project Name:	SPECTRA SALEM	**Lab Number:**	L1506502
Project Number:	140106	**Report Date:**	04/09/15

Data Qualifiers

G - The concentration may be biased high due to matrix interferences (i.e, co-elution) with non-target compound(s). The result should be considered estimated.

H - The analysis of pH was performed beyond the regulatory-required holding time of 15 minutes from the time of sample collection.

I - The lower value for the two columns has been reported due to obvious interference.

M - Reporting Limit (RL) exceeds the MCP CAM Reporting Limit for this analyte.

NJ - Presumptive evidence of compound. This represents an estimated concentration for Tentatively Identified Compounds (TICs), where the identification is based on a mass spectral library search.

P - The RPD between the results for the two columns exceeds the method-specified criteria.

Q - The quality control sample exceeds the associated acceptance criteria. For DOD-related projects, LCS and/or Continuing Calibration Standard exceedences are also qualified on all associated sample results. Note: This flag is not applicable for matrix spike recoveries when the sample concentration is greater than 4x the spike added or for batch duplicate RPD when the sample concentrations are less than 5x the RL. (Metals only.)

R - Analytical results are from sample re-analysis.

RE - Analytical results are from sample re-extraction.

S - Analytical results are from modified screening analysis.

J - Estimated value. This represents an estimated concentration for Tentatively Identified Compounds (TICs).

ND - Not detected at the reporting limit (RL) for the sample.

Report Format: Data Usability Report

Project Name: SPECTRA SALEM **Lab Number:** L1506502
Project Number: 140106 **Report Date:** 04/09/15

REFERENCES

1 Test Methods for Evaluating Solid Waste: Physical/Chemical Methods. EPA SW-846. Third Edition. Updates I - IV, 2007.

3 Methods for the Determination of Metals in Environmental Samples, Supplement I. EPA/600/R-94/111. May 1994.

4 Methods for Chemical Analysis of Water and Wastes. EPA 600/4-79-020. Revised March 1983.

5 Methods for the Organic Chemical Analysis of Municipal and Industrial Wastewater. Appendix A, Part 136, 40 CFR (Code of Federal Regulations).

14 Methods for the Determination of Organic Compounds in Finished Drinking Water and Raw Source Water. EPA/600/4-88/039, Revised July 1991.

19 Inductively Coupled Plasma Atomic Emission Spectrometric Method for Trace Element Analysis of Water and Wastes. Appendix C, Part 136, 40 CFR (Code of Federal Regulations). July 1, 1999 edition.

30 Standard Methods for the Examination of Water and Wastewater. APHA-AWWA-WPCF. 18th Edition. 1992.

44 Methods for the Determination of Inorganic Substances in Environmental Samples, EPA/600/R-93/100, August 1993.

74 Method 1664,Revision A: N-Hexane Extractable Material (HEM; Oil & Grease) and Silica Gel Treated N-Hexane Extractable Material (SGT-HEM; Non-polar Material) by Extraction and Gravimetry, EPA-821-R-98-002, February 1999.

LIMITATION OF LIABILITIES

Alpha Analytical performs services with reasonable care and diligence normal to the analytical testing laboratory industry. In the event of an error, the sole and exclusive responsibility of Alpha Analytical shall be to re-perform the work at it's own expense. In no event shall Alpha Analytical be held liable for any incidental, consequential or special damages, including but not limited to, damages in any way connected with the use of, interpretation of, information or analysis provided by Alpha Analytical.

We strongly urge our clients to comply with EPA protocol regarding sample volume, preservation, cooling, containers, sampling procedures, holding time and splitting of samples in the field.

Certification Information

Last revised December 16, 2014

The following analytes are not included in our NELAP Scope of Accreditation:

Westborough Facility
EPA 524.2: Acetone, 2-Butanone (Methyl ethyl ketone (MEK)), Tert-butyl alcohol, 2-Hexanone, Tetrahydrofuran, 1,3,5-Trichlorobenzene, 4-Methyl-2-pentanone (MIBK), Carbon disulfide, Diethyl ether.
EPA 8260C: 1,2,4,5-Tetramethylbenzene, 4-Ethyltoluene, Iodomethane (methyl iodide), Methyl methacrylate, Azobenzene.
EPA 8270D: 1-Methylnaphthalene, Dimethylnaphthalene,1,4-Diphenylhydrazine.
EPA 625: 4-Chloroaniline, 4-Methylphenol.
SM4500: Soil: Total Phosphorus, TKN, NO2, NO3.
EPA 9071: Total Petroleum Hydrocarbons, Oil & Grease.

Mansfield Facility
EPA 8270D: Biphenyl.
EPA 2540D: TSS
EPA TO-15: Halothane, 2,4,4-Trimethyl-2-pentene, 2,4,4-Trimethyl-1-pentene, Thiophene, 2-Methylthiophene, 3-Methylthiophene, 2-Ethylthiophene, 1,2,3-Trimethylbenzene, Indan, Indene, 1,2,4,5-Tetramethylbenzene, Benzothiophene, 1-Methylnaphthalene.

The following analytes are included in our Massachusetts DEP Scope of Accreditation, Westborough Facility:

Drinking Water
EPA 200.8: Sb,As,Ba,Be,Cd,Cr,Cu,Pb,Ni,Se,Tl; **EPA 200.7**: Ba,Be,Ca,Cd,Cr,Cu,Na; **EPA 245.1:** Mercury;
EPA 300.0: Nitrate-N, Fluoride, Sulfate; **EPA 353.2**: Nitrate-N, Nitrite-N; **SM4500NO3-F**: Nitrate-N, Nitrite-N; **SM4500F-C, SM4500CN-CE, EPA 180.1, SM2130B, SM4500Cl-D, SM2320B, SM2540C, SM4500H-B**
EPA 332: Perchlorate.
Microbiology: **SM9215B; SM9223-P/A, SM9223B-Colilert-QT, Enterolert-QT.**

Non-Potable Water
EPA 200.8: Al,Sb,As,Be,Cd,Cr,Cu,Pb,Mn,Ni,Se,Ag,Tl,Zn;
EPA 200.7: Al,Sb,As,Be,Cd,Ca,Cr,Co,Cu,Fe,Pb,Mg,Mn,Mo,Ni,K,Se,Ag,Na,Sr,Ti,Tl,V,Zn;
EPA 245.1, SM4500H,B, EPA 120.1, SM2510B, SM2540C, SM2340B, SM2320B, SM4500CL-E, SM4500F-BC, SM426C, SM4500NH3-BH, **EPA 350.1**: Ammonia-N, **LACHAT 10-107-06-1-B**: Ammonia-N, **SM4500NO3-F,**
EPA 353.2: Nitrate-N**, SM4500NH3-BC-NES, EPA 351.1, SM4500P-E, SM4500P-B, E, SM5220D, EPA 410.4, SM5210B, SM5310C, SM4500CL-D, EPA 1664, SM14 510AC, EPA 420.1, SM4500-CN-CE, SM2540D.**
EPA 624: Volatile Halocarbons & Aromatics,
EPA 608: Chlordane, Toxaphene, Aldrin, alpha-BHC, beta-BHC, gamma-BHC, delta-BHC, Dieldrin, DDD, DDE, DDT, Endosulfan I, Endosulfan II, Endosulfan sulfate, Endrin, Endrin Aldehyde, Heptachlor, Heptachlor Epoxide, PCBs
EPA 625: SVOC (Acid/Base/Neutral Extractables), **EPA 600/4-81-045**: PCB-Oil.
Microbiology: **SM9223B-Colilert-QT; Enterolert-QT, SM9222D-MF**.

For a complete listing of analytes and methods, please contact your Alpha Project Manager.

CHAIN OF CUSTODY

PAGE 1 OF 1

Date Rec'd in Lab: 4/2/15

ALPHA Job #: L1506502

ALPHA ANALYTICAL
World Class Chemistry
8 Walkup Drive
Westboro, MA 01581
Tel: 508-898-9220
320 Forbes Blvd
Mansfield, MA 02048
Tel: 508-822-9300

Client Information

Client: TRC

Address: 650 Suffolk St
Lowell, MA 01854

Phone: (978) 970-5600

Email: moliveira@trcsolutions.com

Project Information

Project Name: Spectra Salem

Project Location: Salem, MA

Project #: 140106

Project Manager: Matt Oliveira

ALPHA Quote #:

Turn-Around Time

☐ Standard ☐ RUSH (only confirmed if pre-approved!)

Date Due: 4/9/15

Report Information - Data Deliverables

☐ ADEx ☑ EMAIL

Billing Information

☑ Same as Client info PO #:

Regulatory Requirements & Project Information Requirements

☐ Yes ☐ No MA MCP Analytical Methods ☐ Yes ☐ No CT RCP Analytical Methods
☐ Yes ☐ No Matrix Spike Required on this SDG? (Required for MCP Inorganics)
☐ Yes ☐ No GW1 Standards (Info Required for Metals & EPH with Targets)
☑ Yes ☐ No NPDES RGP
☐ Other State /Fed Program _____ Criteria _____

Additional Project Information:
ANALYSIS on Bottles

ANALYSIS: VOC: ☐ 8260 ☐ 624 ☐ 524.2; SVOC: ☐ ABN ☐ PAH; METALS: ☐ MCP 13 ☐ MCP 14 ☐ RCP 15; METALS: ☐ RCRA5 ☐ RCRA8 ☐ PP13; EPH: ☐ Ranges & Targets ☐ Ranges Only; VPH: ☐ Ranges & Targets ☐ Ranges Only; ☐ PCB ☐ PEST; TPH: ☐ Quant Only ☐ Fingerprint; RGP Parameters

SAMPLE INFO: Filtration ☐ Field ☐ Lab to do; Preservation ☐ Lab to do

ALPHA Lab ID (Lab Use Only)	Sample ID	Collection Date	Collection Time	Sample Matrix	Sampler Initials	VOC	SVOC	METALS	METALS	EPH	VPH	PCB	TPH	RGP Parameters					Sample Comments	TOTAL # BOTTLES
0650201	TT-119 C	4/1/15	1370	GW	MPS									X					MS/DUP for RGP metals hex chrom, and cyanide	

Container Type															
Preservative															

Container Type
P= Plastic
A= Amber glass
V= Vial
G= Glass
B= Bacteria cup
C= Cube
O= Other
E= Encore
D= BOD Bottle

Preservative
A= None
B= HCl
C= HNO_3
D= H_2SO_4
E= NaOH
F= MeOH
G= $NaHSO_4$
H = $Na_2S_2O_3$
I= Ascorbic Acid
J = NH_4Cl
K= Zn Acetate
O= Other

Relinquished By:	Date/Time	Received By:	Date/Time
[illegible]	4/2/15 11:40	[illegible]	4/2/15 11:40
[illegible]	4-2-15 18:20	[illegible]	4/2/15 1830

All samples submitted are subject to Alpha's Terms and Conditions. See reverse side.

FORM NO: 01-01 (rev. 12-Mar-2012)

ATTACHMENT 8

Groundwater Water Quality Data Summary
and Data Package

ANALYTICAL REPORT

Lab Number:	L1506842
Client:	TRC Environmental Consultants Wannalancit Mills 650 Suffolk Street Lowell, MA 01854
ATTN:	Matt Oliveira
Phone:	(978) 656-3600
Project Name:	SPECTRA SALEM
Project Number:	140106
Report Date:	04/09/15

The original project report/data package is held by Alpha Analytical. This report/data package is paginated and should be reproduced only in its entirety. Alpha Analytical holds no responsibility for results and/or data that are not consistent with the original.

Certifications & Approvals: MA (M-MA086), NY (11148), CT (PH-0574), NH (2003), NJ NELAP (MA935), RI (LAO00065), ME (MA00086), PA (68-03671), VA (460195), MD (348), IL (200077), NC (666), TX (T104704476), DOD (L2217), USDA (Permit #P-330-11-00240).

Eight Walkup Drive, Westborough, MA 01581-1019
508-898-9220 (Fax) 508-898-9193 800-624-9220 - www.alphalab.com

Project Name: SPECTRA SALEM
Project Number: 140106

Lab Number: L1506842
Report Date: 04/09/15

Alpha Sample ID	Client ID	Matrix	Sample Location	Collection Date/Time	Receive Date
L1506842-01	TT-119C	WATER	SALEM, MA	04/07/15 11:20	04/07/15

Project Name: SPECTRA SALEM
Project Number: 140106
Lab Number: L1506842
Report Date: 04/09/15

Case Narrative

The samples were received in accordance with the Chain of Custody and no significant deviations were encountered during the preparation or analysis unless otherwise noted. Sample Receipt, Container Information, and the Chain of Custody are located at the back of the report.

Results contained within this report relate only to the samples submitted under this Alpha Lab Number and meet all of the requirements of NELAC, for all NELAC accredited parameters. The data presented in this report is organized by parameter (i.e. VOC, SVOC, etc.). Sample specific Quality Control data (i.e. Surrogate Spike Recovery) is reported at the end of the target analyte list for each individual sample, followed by the Laboratory Batch Quality Control at the end of each parameter. If a sample was re-analyzed or re-extracted due to a required quality control corrective action and if both sets of data are reported, the Laboratory ID of the re-analysis or re-extraction is designated with an "R" or "RE", respectively. When multiple Batch Quality Control elements are reported (e.g. more than one LCS), the associated samples for each element are noted in the grey shaded header line of each data table. Any Laboratory Batch, Sample Specific % recovery or RPD value that is outside the listed Acceptance Criteria is bolded in the report. All specific QC information is also incorporated in the Data Usability format of our Data Merger tool where it can be reviewed along with any associated usability implications. Soil/sediments, solids and tissues are reported on a dry weight basis unless otherwise noted. Definitions of all data qualifiers and acronyms used in this report are provided in the Glossary located at the back of the report.

In reference to questions H (CAM) or 4 (RCP) when "NO" is checked, the performance criteria for CAM and RCP methods allow for some quality control failures to occur and still be within method compliance. In these instances the specific failure is not narrated but noted in the associated QC table. The information is also incorporated in the Data Usability format of our Data Merger tool where it can be reviewed along with any associated usability implications.

Please see the associated ADEx data file for a comparison of laboratory reporting limits that were achieved with the regulatory Numerical Standards requested on the Chain of Custody.

HOLD POLICY
For samples submitted on hold, Alpha's policy is to hold samples (with the exception of Air canisters) free of charge for 21 calendar days from the date the project is completed. After 21 calendar days, we will dispose of all samples submitted including those put on hold unless you have contacted your Client Service Representative and made arrangements for Alpha to continue to hold the samples. Air canisters will be disposed after 3 business days from the date the project is completed.

Please contact Client Services at 800-624-9220 with any questions.

Project Name:	SPECTRA SALEM	**Lab Number:**	L1506842
Project Number:	140106	**Report Date:**	04/09/15

Case Narrative (continued)

Sample Receipt

The samples were received at the laboratory above the required temperature range. The samples were transported to the laboratory in a cooler with ice and delivered directly from the sampling site.

I, the undersigned, attest under the pains and penalties of perjury that, to the best of my knowledge and belief and based upon my personal inquiry of those responsible for providing the information contained in this analytical report, such information is accurate and complete. This certificate of analysis is not complete unless this page accompanies any and all pages of this report.

Authorized Signature: Lisa Westerlind

Title: Technical Director/Representative

Date: 04/09/15

INORGANICS
&
MISCELLANEOUS

Project Name: SPECTRA SALEM
Project Number: 140106

Lab Number: L1506842
Report Date: 04/09/15

SAMPLE RESULTS

Lab ID: L1506842-01
Client ID: TT-119C
Sample Location: SALEM, MA
Matrix: Water

Date Collected: 04/07/15 11:20
Date Received: 04/07/15
Field Prep: Not Specified

Parameter	Result	Qualifier	Units	RL	MDL	Dilution Factor	Date Prepared	Date Analyzed	Analytical Method	Analyst
General Chemistry - Westborough Lab										
Chlorine, Total Residual	ND		mg/l	0.02	--	1	-	04/07/15 17:05	30,4500CL-D	AS
Chromium, Hexavalent	ND		mg/l	0.010	--	1	04/07/15 20:25	04/07/15 20:38	30,3500CR-B	AS

Project Name: SPECTRA SALEM **Lab Number:** L1506842

Project Number: 140106 **Report Date:** 04/09/15

Method Blank Analysis
Batch Quality Control

Parameter	Result	Qualifier	Units	RL	MDL	Dilution Factor	Date Prepared	Date Analyzed	Analytical Method	Analyst
General Chemistry - Westborough Lab for sample(s): 01 Batch: WG774105-1										
Chlorine, Total Residual	ND		mg/l	0.02	--	1	-	04/07/15 17:05	30,4500CL-D	AS
General Chemistry - Westborough Lab for sample(s): 01 Batch: WG774125-1										
Chromium, Hexavalent	ND		mg/l	0.010	--	1	04/07/15 20:25	04/07/15 20:37	30,3500CR-B	AS

Lab Control Sample Analysis
Batch Quality Control

Project Name: SPECTRA SALEM
Project Number: 140106
Lab Number: L1506842
Report Date: 04/09/15

Parameter	LCS %Recovery	Qual	LCSD %Recovery	Qual	%Recovery Limits	RPD	Qual	RPD Limits
General Chemistry - Westborough Lab Associated sample(s): 01 Batch: WG774105-2								
Chlorine, Total Residual	97		-		90-110	-		
General Chemistry - Westborough Lab Associated sample(s): 01 Batch: WG774125-2								
Chromium, Hexavalent	114		-		85-115	-		20

Matrix Spike Analysis
Batch Quality Control

Project Name: SPECTRA SALEM
Project Number: 140106
Lab Number: L1506842
Report Date: 04/09/15

Parameter	Native Sample	MS Added	MS Found	MS %Recovery	Qual	MSD Found	MSD %Recovery	Qual	Recovery Limits	RPD	Qual	RPD Limits
General Chemistry - Westborough Lab Associated sample(s): 01 QC Batch ID: WG774125-4 QC Sample: L1506842-01 Client ID: TT-119C												
Chromium, Hexavalent	ND	0.1	0.096	96		-	-		85-115	-		20

Lab Duplicate Analysis
Batch Quality Control

Project Name: SPECTRA SALEM
Project Number: 140106

Lab Number: L1506842
Report Date: 04/09/15

Parameter	Native Sample	Duplicate Sample	Units	RPD	Qual	RPD Limits
General Chemistry - Westborough Lab Associated sample(s): 01 QC Batch ID: WG774105-3 QC Sample: L1506842-01 Client ID: TT-119C						
Chlorine, Total Residual	ND	ND	mg/l	NC		20
General Chemistry - Westborough Lab Associated sample(s): 01 QC Batch ID: WG774125-3 QC Sample: L1506842-01 Client ID: TT-119C						
Chromium, Hexavalent	ND	ND	mg/l	NC		20

Project Name: SPECTRA SALEM
Project Number: 140106

Lab Number: L1506842
Report Date: 04/09/15

Sample Receipt and Container Information

Were project specific reporting limits specified? YES

Reagent H2O Preserved Vials Frozen on: NA

Cooler Information Custody Seal

Cooler	
A	Absent

Container Information

Container ID	Container Type	Cooler	pH	Temp deg C	Pres	Seal	Analysis(*)
L1506842-01A	Plastic 950ml unpreserved	A	8	9.6	Y	Absent	TRC-4500(1)
L1506842-01B	Plastic 950ml unpreserved	A	8	9.6	Y	Absent	HEXCR-3500(1)

*Values in parentheses indicate holding time in days

Project Name:	SPECTRA SALEM	**Lab Number:**	L1506842
Project Number:	140106	**Report Date:**	04/09/15

GLOSSARY

Acronyms

EDL	- Estimated Detection Limit: This value represents the level to which target analyte concentrations are reported as estimated values, when those target analyte concentrations are quantified below the reporting limit (RL). The EDL includes any adjustments from dilutions, concentrations or moisture content, where applicable. The use of EDLs is specific to the analysis of PAHs using Solid-Phase Microextraction (SPME).
EPA	- Environmental Protection Agency.
LCS	- Laboratory Control Sample: A sample matrix, free from the analytes of interest, spiked with verified known amounts of analytes or a material containing known and verified amounts of analytes.
LCSD	- Laboratory Control Sample Duplicate: Refer to LCS.
LFB	- Laboratory Fortified Blank: A sample matrix, free from the analytes of interest, spiked with verified known amounts of analytes or a material containing known and verified amounts of analytes.
MDL	- Method Detection Limit: This value represents the level to which target analyte concentrations are reported as estimated values, when those target analyte concentrations are quantified below the reporting limit (RL). The MDL includes any adjustments from dilutions, concentrations or moisture content, where applicable.
MS	- Matrix Spike Sample: A sample prepared by adding a known mass of target analyte to a specified amount of matrix sample for which an independent estimate of target analyte concentration is available.
MSD	- Matrix Spike Sample Duplicate: Refer to MS.
NA	- Not Applicable.
NC	- Not Calculated: Term is utilized when one or more of the results utilized in the calculation are non-detect at the parameter's reporting unit.
NI	- Not Ignitable.
RL	- Reporting Limit: The value at which an instrument can accurately measure an analyte at a specific concentration. The RL includes any adjustments from dilutions, concentrations or moisture content, where applicable.
RPD	- Relative Percent Difference: The results from matrix and/or matrix spike duplicates are primarily designed to assess the precision of analytical results in a given matrix and are expressed as relative percent difference (RPD). Values which are less than five times the reporting limit for any individual parameter are evaluated by utilizing the absolute difference between the values; although the RPD value will be provided in the report.
SRM	- Standard Reference Material: A reference sample of a known or certified value that is of the same or similar matrix as the associated field samples.

Footnotes

1	- The reference for this analyte should be considered modified since this analyte is absent from the target analyte list of the original method.

Terms

Total: With respect to Organic analyses, a 'Total' result is defined as the summation of results for individual isomers or Aroclors. If a 'Total' result is requested, the results of its individual components will also be reported. This is applicable to 'Total' results for methods 8260, 8081 and 8082.

Analytical Method: Both the document from which the method originates and the analytical reference method. (Example: EPA 8260B is shown as 1,8260B.) The codes for the reference method documents are provided in the References section of the Addendum.

Data Qualifiers

A	- Spectra identified as "Aldol Condensation Product".
B	- The analyte was detected above the reporting limit in the associated method blank. Flag only applies to associated field samples that have detectable concentrations of the analyte at less than ten times (10x) the concentration found in the blank. For MCP-related projects, flag only applies to associated field samples that have detectable concentrations of the analyte at less than ten times (10x) the concentration found in the blank. For DOD-related projects, flag only applies to associated field samples that have detectable concentrations of the analyte at less than ten times (10x) the concentration found in the blank AND the analyte was detected above one-half the reporting limit (or above the reporting limit for common lab contaminants) in the associated method blank. For NJ-Air-related projects, flag only applies to associated field samples that have detectable concentrations of the analyte above the reporting limit. For NJ-related projects (excluding Air), flag only applies to associated field samples that have detectable concentrations of the analyte, which was detected above the reporting limit in the associated method blank or above five times the reporting limit for common lab contaminants (Phthalates, Acetone, Methylene Chloride, 2-Butanone).
C	- Co-elution: The target analyte co-elutes with a known lab standard (i.e. surrogate, internal standards, etc.) for co-extracted analyses.
D	- Concentration of analyte was quantified from diluted analysis. Flag only applies to field samples that have detectable concentrations of the analyte.
E	- Concentration of analyte exceeds the range of the calibration curve and/or linear range of the instrument.

Report Format: Data Usability Report

Project Name:	SPECTRA SALEM	**Lab Number:**	L1506842
Project Number:	140106	**Report Date:**	04/09/15

Data Qualifiers

G - The concentration may be biased high due to matrix interferences (i.e, co-elution) with non-target compound(s). The result should be considered estimated.

H - The analysis of pH was performed beyond the regulatory-required holding time of 15 minutes from the time of sample collection.

I - The lower value for the two columns has been reported due to obvious interference.

M - Reporting Limit (RL) exceeds the MCP CAM Reporting Limit for this analyte.

NJ - Presumptive evidence of compound. This represents an estimated concentration for Tentatively Identified Compounds (TICs), where the identification is based on a mass spectral library search.

P - The RPD between the results for the two columns exceeds the method-specified criteria.

Q - The quality control sample exceeds the associated acceptance criteria. For DOD-related projects, LCS and/or Continuing Calibration Standard exceedences are also qualified on all associated sample results. Note: This flag is not applicable for matrix spike recoveries when the sample concentration is greater than 4x the spike added or for batch duplicate RPD when the sample concentrations are less than 5x the RL. (Metals only.)

R - Analytical results are from sample re-analysis.

RE - Analytical results are from sample re-extraction.

S - Analytical results are from modified screening analysis.

J - Estimated value. This represents an estimated concentration for Tentatively Identified Compounds (TICs).

ND - Not detected at the reporting limit (RL) for the sample.

Report Format: Data Usability Report

Project Name: SPECTRA SALEM **Lab Number:** L1506842
Project Number: 140106 **Report Date:** 04/09/15

REFERENCES

30 Standard Methods for the Examination of Water and Wastewater. APHA-AWWA-WPCF. 18th Edition. 1992.

LIMITATION OF LIABILITIES

Alpha Analytical performs services with reasonable care and diligence normal to the analytical testing laboratory industry. In the event of an error, the sole and exclusive responsibility of Alpha Analytical shall be to re-perform the work at it's own expense. In no event shall Alpha Analytical be held liable for any incidental, consequential or special damages, including but not limited to, damages in any way connected with the use of, interpretation of, information or analysis provided by Alpha Analytical.

We strongly urge our clients to comply with EPA protocol regarding sample volume, preservation, cooling, containers, sampling procedures, holding time and splitting of samples in the field.

Certification Information

Last revised December 16, 2014

The following analytes are not included in our NELAP Scope of Accreditation:

Westborough Facility
EPA 524.2: Acetone, 2-Butanone (Methyl ethyl ketone (MEK)), Tert-butyl alcohol, 2-Hexanone, Tetrahydrofuran, 1,3,5-Trichlorobenzene, 4-Methyl-2-pentanone (MIBK), Carbon disulfide, Diethyl ether.
EPA 8260C: 1,2,4,5-Tetramethylbenzene, 4-Ethyltoluene, Iodomethane (methyl iodide), Methyl methacrylate, Azobenzene.
EPA 8270D: 1-Methylnaphthalene, Dimethylnaphthalene,1,4-Diphenylhydrazine.
EPA 625: 4-Chloroaniline, 4-Methylphenol.
SM4500: Soil: Total Phosphorus, TKN, NO2, NO3.
EPA 9071: Total Petroleum Hydrocarbons, Oil & Grease.

Mansfield Facility
EPA 8270D: Biphenyl.
EPA 2540D: TSS
EPA TO-15: Halothane, 2,4,4-Trimethyl-2-pentene, 2,4,4-Trimethyl-1-pentene, Thiophene, 2-Methylthiophene, 3-Methylthiophene, 2-Ethylthiophene, 1,2,3-Trimethylbenzene, Indan, Indene, 1,2,4,5-Tetramethylbenzene, Benzothiophene, 1-Methylnaphthalene.

The following analytes are included in our Massachusetts DEP Scope of Accreditation, Westborough Facility:

Drinking Water
EPA 200.8: Sb,As,Ba,Be,Cd,Cr,Cu,Pb,Ni,Se,Tl; **EPA 200.7**: Ba,Be,Ca,Cd,Cr,Cu,Na; **EPA 245.1:** Mercury;
EPA 300.0: Nitrate-N, Fluoride, Sulfate; **EPA 353.2**: Nitrate-N, Nitrite-N; **SM4500NO3-F**: Nitrate-N, Nitrite-N; **SM4500F-C, SM4500CN-CE, EPA 180.1, SM2130B, SM4500Cl-D, SM2320B, SM2540C, SM4500H-B**
EPA 332: Perchlorate.
Microbiology: **SM9215B; SM9223-P/A, SM9223B-Colilert-QT, Enterolert-QT.**

Non-Potable Water
EPA 200.8: Al,Sb,As,Be,Cd,Cr,Cu,Pb,Mn,Ni,Se,Ag,Tl,Zn;
EPA 200.7: Al,Sb,As,Be,Cd,Ca,Cr,Co,Cu,Fe,Pb,Mg,Mn,Mo,Ni,K,Se,Ag,Na,Sr,Ti,Tl,V,Zn;
EPA 245.1, SM4500H,B, EPA 120.1, SM2510B, SM2540C, SM2340B, SM2320B, SM4500CL-E, SM4500F-BC, SM426C, SM4500NH3-BH, **EPA 350.1**: Ammonia-N, **LACHAT 10-107-06-1-B**: Ammonia-N, **SM4500NO3-F,**
EPA 353.2: Nitrate-N**, SM4500NH3-BC-NES, EPA 351.1, SM4500P-E, SM4500P-B, E, SM5220D, EPA 410.4, SM5210B, SM5310C, SM4500CL-D, EPA 1664, SM14 510AC, EPA 420.1, SM4500-CN-CE, SM2540D.**
EPA 624: Volatile Halocarbons & Aromatics,
EPA 608: Chlordane, Toxaphene, Aldrin, alpha-BHC, beta-BHC, gamma-BHC, delta-BHC, Dieldrin, DDD, DDE, DDT, Endosulfan I, Endosulfan II, Endosulfan sulfate, Endrin, Endrin Aldehyde, Heptachlor, Heptachlor Epoxide, PCBs
EPA 625: SVOC (Acid/Base/Neutral Extractables), **EPA 600/4-81-045**: PCB-Oil.
Microbiology: **SM9223B-Colilert-QT; Enterolert-QT, SM9222D-MF**.

For a complete listing of analytes and methods, please contact your Alpha Project Manager.

Serial_No:04091519:10

CHAIN OF CUSTODY

PAGE 1 OF 1

ALPHA ANALYTICAL — Water Glass Chemistry

8 Walkup Drive, Westboro, MA 01581, Tel: 508-898-9220
320 Forbes Blvd, Mansfield, MA 02048, Tel: 508-822-9300

Date Rec'd in Lab: 4/7/15

ALPHA Job #: L1506842

Client Information

Client: TRC
Address: 650 Suffolk St, Lowell, MA 01854
Phone: 978-970-5600
Email: moliveira@trcsolutions.com

Project Information

Project Name: Spectra - Salem
Project Location: Salem, MA
Project #: 140106
Project Manager: Matt Oliveira
ALPHA Quote #:

Turn-Around Time

☐ Standard ☐ RUSH (only confirmed if pre-approved)
Date Due: 4/21/15

Report Information - Data Deliverables

☐ ADEx ☑ EMAIL

Billing Information

☐ Same as Client info PO #:

Regulatory Requirements & Project Information Requirements

☐ Yes ☐ No MA MCP Analytical Methods ☐ Yes ☐ No CT RCP Analytical Methods
☐ Yes ☐ No Matrix Spike Required on this SDG? (Required for MCP Inorganics)
☐ Yes ☐ No GW1 Standards (Info Required for Metals & EPH with Targets)
☑ Yes ☐ No NPDES RGP
☐ Other State /Fed Program _____ Criteria _____

Additional Project Information:

ANALYSIS: VOC: ☐ 8260 ☐ 624 ☐ 524.2; SVOC: ☐ ABN ☐ PAH; METALS: ☐ MCP 13 ☐ MCP 14 ☐ RCP 15; METALS: ☐ RCRA5 ☐ RCRA8 ☐ PP13; EPH: ☐ Ranges & Targets ☐ Ranges Only; VPH: ☐ Ranges & Targets ☐ Ranges Only; ☐ PCB ☐ PEST; TPH: ☐ Quant Only ☐ Fingerprint; Total Residual Chlorine; Hexavalent Chromium

SAMPLE INFO — Filtration: ☐ Field ☐ Lab to do; Preservation: ☐ Lab to do

ALPHA Lab ID (Lab Use Only)	Sample ID	Collection Date	Collection Time	Sample Matrix	Sampler Initials	Total Residual Chlorine	Hexavalent Chromium	Sample Comments	Total # Bottles
06842 01	TT-119C	4/7/15	1120	GW	MPS	X	X	per RCP standards Extra bottle provided as backup	2
Container Type						P	P		
Preservative						NA	NA		

Container Type: P= Plastic, A= Amber glass, V= Vial, G= Glass, B= Bacteria cup, C= Cube, O= Other, E= Encore, D= BOD Bottle

Preservative: A= None, B= HCl, C= HNO_3, D= H_2SO_4, E= NaOH, F= MeOH, G= $NaHSO_4$, H = $Na_2S_2O_3$, I= Ascorbic Acid, J = NH_4Cl, K= Zn Acetate, O= Other

Relinquished By:	Date/Time	Received By:	Date/Time
[signature]	4/7/15 1355	[signature] AM	4/7/15

All samples submitted are subject to Alpha's Terms and Conditions. See reverse side.

FORM NO: 01-01 (rev. 12-Mar-2012)

ATTACHMENT 9

Agency Correspondence

United States Department of the Interior

FISH AND WILDLIFE SERVICE

New England Field Office
70 Commercial Street, Suite 300
Concord, NH 03301-5087
http://www.fws.gov/newengland

January 15, 2014

Reference:	Project	Location
	Natural gas pipeline	Salem and Beverly, MA

Mr. Richard Paquette, Jr.
TRC
6 Ashley Drive, 1st Floor
Scarborough, ME 04074

Dear Mr. Paquette:

This responds to your recent correspondence requesting information on the presence of federally listed and/or proposed endangered or threatened species in relation to the proposed activity referenced above. These comments are provided in accordance with the Endangered Species Act (87 Stat. 884, as amended; 16 U.S.C. 1531, *et seq.*).

Based on information currently available to us, no federally listed or proposed, threatened or endangered species or critical habitat under the jurisdiction of the U.S. Fish and Wildlife Service are known to occur in the project area. Preparation of a Biological Assessment or further consultation with us under section 7 of the Endangered Species Act is not required. No further Endangered Species Act coordination is necessary for a period of one year from the date of this letter, unless additional information on listed or proposed species becomes available.

To obtain updated lists of federally listed or proposed threatened or endangered species and critical habitats, it is not necessary to contact this office. Instead, please visit the Endangered Species Consultation page on the New England Field Office's website:

www.fws.gov/newengland/endangeredspec-consultation.htm (accessed January 2013)

On the website, there is also a link to procedures that may allow you to conclude if habitat for a listed species is present in the project area. If no such habitat exists, then no federally listed species are present in the project area and there is no need to contact us for further consultation. If the above conclusion cannot be reached, further consultation with this office is advised. Information describing the nature and location of the proposed activity that should be provided to us for further informal consultation can be found at the above-referenced site.

Thank you for your coordination. Please contact Maria Tur of this office at 603-223-2541, extension 12, if we can be of further assistance.

Sincerely yours,

Thomas R. Chapman
Supervisor
New England Field Office

United States Department of the Interior

FISH AND WILDLIFE SERVICE
New England Ecological Services Field Office
70 COMMERCIAL STREET, SUITE 300
CONCORD, NH 3301
PHONE: (603)223-2541 FAX: (603)223-0104
URL: www.fws.gov/newengland

Consultation Code: 05E1NE00-2015-SLI-0381 April 15, 2015
Event Code: 05E1NE00-2015-E-00629
Project Name: SHS Pipeline

Subject: List of threatened and endangered species that may occur in your proposed project location, and/or may be affected by your proposed project

To Whom It May Concern:

The enclosed species list identifies threatened, endangered, proposed and candidate species, as well as proposed and final designated critical habitat, that may occur within the boundary of your proposed project and/or may be affected by your proposed project. The species list fulfills the requirements of the U.S. Fish and Wildlife Service (Service) under section 7(c) of the Endangered Species Act (Act) of 1973, as amended (16 U.S.C. 1531 *et seq.*).

New information based on updated surveys, changes in the abundance and distribution of species, changed habitat conditions, or other factors could change this list. Please feel free to contact us if you need more current information or assistance regarding the potential impacts to federally proposed, listed, and candidate species and federally designated and proposed critical habitat. Please note that under 50 CFR 402.12(e) of the regulations implementing section 7 of the Act, the accuracy of this species list should be verified after 90 days. This verification can be completed formally or informally as desired. The Service recommends that verification be completed by visiting the ECOS-IPaC website at regular intervals during project planning and implementation for updates to species lists and information. An updated list may be requested through the ECOS-IPaC system by completing the same process used to receive the enclosed list.

The purpose of the Act is to provide a means whereby threatened and endangered species and the ecosystems upon which they depend may be conserved. Under sections 7(a)(1) and 7(a)(2) of the Act and its implementing regulations (50 CFR 402 *et seq.*), Federal agencies are required to utilize their authorities to carry out programs for the conservation of threatened and endangered species and to determine whether projects may affect threatened and endangered species and/or designated critical habitat.

A Biological Assessment is required for construction projects (or other undertakings having similar physical impacts) that are major Federal actions significantly affecting the quality of the human environment as defined in the National Environmental Policy Act (42 U.S.C. 4332(2)(c)). For projects other than major construction activities, the Service suggests that a biological evaluation similar to a Biological Assessment be prepared to determine whether the project may affect listed or proposed species and/or designated or proposed critical habitat. Recommended contents of a Biological Assessment are described at 50 CFR 402.12.

If a Federal agency determines, based on the Biological Assessment or biological evaluation, that listed species and/or designated critical habitat may be affected by the proposed project, the agency is required to consult with the Service pursuant to 50 CFR 402. In addition, the Service recommends that candidate species, proposed species and proposed critical habitat be addressed within the consultation. More information on the regulations and procedures for section 7 consultation, including the role of permit or license applicants, can be found in the "Endangered Species Consultation Handbook" at:

http://www.fws.gov/endangered/esa-library/pdf/TOC-GLOS.PDF

Please be aware that bald and golden eagles are protected under the Bald and Golden Eagle Protection Act (16 U.S.C. 668 *et seq.*), and projects affecting these species may require development of an eagle conservation plan (http://www.fws.gov/windenergy/eagle_guidance.html). Additionally, wind energy projects should follow the wind energy guidelines (http://www.fws.gov/windenergy/) for minimizing impacts to migratory birds and bats.

Guidance for minimizing impacts to migratory birds for projects including communications towers (e.g., cellular, digital television, radio, and emergency broadcast) can be found at: http://www.fws.gov/migratorybirds/CurrentBirdIssues/Hazards/towers/towers.htm; http://www.towerkill.com; and http://www.fws.gov/migratorybirds/CurrentBirdIssues/Hazards/towers/comtow.html.

We appreciate your concern for threatened and endangered species. The Service encourages Federal agencies to include conservation of threatened and endangered species into their project planning to further the purposes of the Act. Please include the Consultation Tracking Number in the header of this letter with any request for consultation or correspondence about your project that you submit to our office.

Attachment

United States Department of Interior
Fish and Wildlife Service

Project name: SHS Pipeline

Official Species List

Provided by:

New England Ecological Services Field Office
70 COMMERCIAL STREET, SUITE 300
CONCORD, NH 3301
(603) 223-2541
http://www.fws.gov/newengland

Consultation Code: 05E1NE00-2015-SLI-0381
Event Code: 05E1NE00-2015-E-00629

Project Type: ** Other **

Project Name: SHS Pipeline
Project Description: Earthwork to occur on power plant property (on shore). Groundwater from trench will be extracted, treated and discharged to Salem Harbor under Remediation General Permit.

Please Note: The FWS office may have modified the Project Name and/or Project Description, so it may be different from what was submitted in your previous request. If the Consultation Code matches, the FWS considers this to be the same project. Contact the office in the 'Provided by' section of your previous Official Species list if you have any questions or concerns.

United States Department of Interior
Fish and Wildlife Service

Project name: SHS Pipeline

Project Location Map:

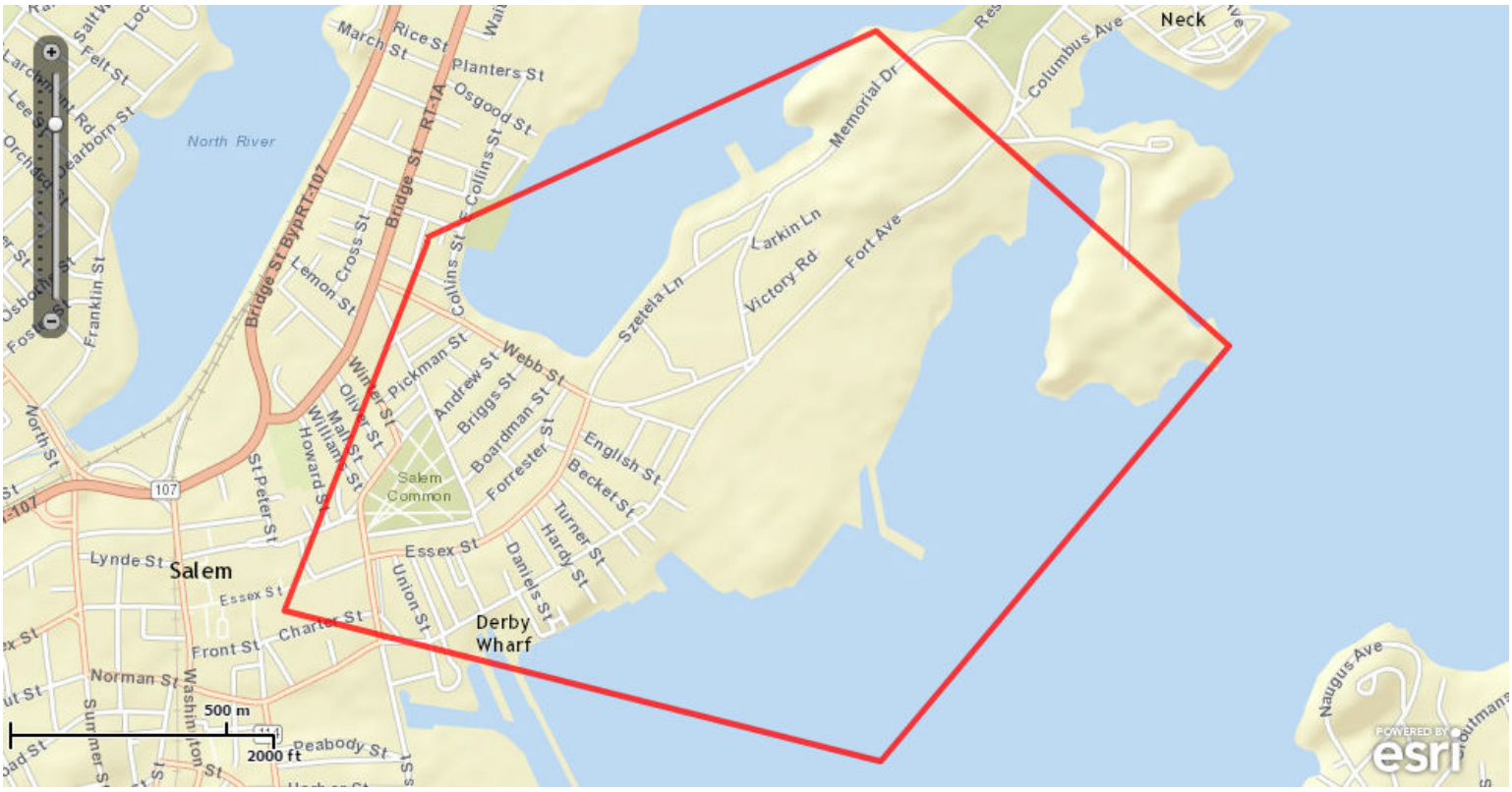

Project Coordinates: MULTIPOLYGON (((-70.8761191 42.5334258, -70.8761102 42.5334267, -70.8761017 42.5334236, -70.8661453 42.5268772, -70.86614 42.5268721, -70.8661369 42.5268655, -70.8661364 42.5268582, -70.8661386 42.5268512, -70.8661431 42.5268455, -70.8759686 42.5182107, -70.8759765 42.5182064, -70.8759855 42.518206, -70.8928083 42.5213374, -70.8928152 42.5213401, -70.8928207 42.5213452, -70.8928239 42.5213519, -70.8928245 42.5213593, -70.8928223 42.5213664, -70.8887927 42.529016, -70.8887927 42.5290743, -70.8887912 42.529082, -70.8887868 42.5290884, -70.8887804 42.5290928, -70.8887727 42.5290943, -70.888765 42.5290928, -70.8887586 42.5290884, -70.8887542 42.529082, -70.8887527 42.5290743, -70.8887527 42.5290111, -70.888755 42.5290018, -70.8927743 42.5213718, -70.8759877 42.5182471, -70.8661892 42.5268582, -70.8761155 42.5333848, -70.8888071 42.529087, -70.8888148 42.5290859, -70.8888224 42.529088, -70.8888285 42.5290927, -70.8888324 42.5290995, -70.8888335 42.5291072, -70.8888314 42.5291148, -70.8888267 42.5291209, -70.8888199 42.5291248, -70.8761191 42.5334258)))

Project Counties: Essex, MA

United States Department of Interior
Fish and Wildlife Service

Project name: SHS Pipeline

Endangered Species Act Species List

There are a total of 2 threatened or endangered species on your species list. Species on this list should be considered in an effects analysis for your project and could include species that exist in another geographic area. For example, certain fish may appear on the species list because a project could affect downstream species. Critical habitats listed under the **Has Critical Habitat** column may or may not lie within your project area. See the **Critical habitats within your project area** section further below for critical habitat that lies within your project. Please contact the designated FWS office if you have questions.

Birds	Status	Has Critical Habitat	Condition(s)
Red Knot *(Calidris canutus rufa)*	Threatened		
Roseate tern *(Sterna dougallii dougallii)* Population: northeast U.S. nesting pop.	Endangered		

Critical habitats that lie within your project area

There are no critical habitats within your project area.

Paquette, Richard

From: Jennifer Goebel - NOAA Affiliate <jennifer.goebel@noaa.gov>
Sent: Thursday, December 05, 2013 1:49 PM
To: Paquette, Richard
Subject: Algonquin gas Transmission LLAC - Salem Lateral Project

Dear Mr. Paquette:

We received your letter regarding the Algonquin Gas Transmission natural gas pipeline today, and have reviewed the materials provided to us. Your letter states that you are proposing to install 0.7 miles of 16-inch diameter pipeline offshore beneath Beverly Harbor and under Collins Cove using two horizontal directional drills.

No federally listed or proposed threatened or endangered species under the jurisdiction of NMFS are known to exist in the location of your proposed project. NMFS Protected Resources Division does not intend to offer additional comments on this proposal as described.

If the feasibility study scheduled for delivery in January 2014 determines that HDD installation is not possible, please let us know. If you have any questions regarding protected species at the project, feel free to contact me.

Sincerely,

--
Jennifer Goebel
Technical Writer, Protected Resources Division
Northeast Regional Office
NOAA Fisheries Service
978-281-9373

This email has been scanned by the Symantec Email Security.cloud service.
For more information please visit http://www.symanteccloud.com

The Commonwealth of Massachusetts

William Francis Galvin, Secretary of the Commonwealth
Massachusetts Historical Commission

July 23, 2014

Kimberly D. Bose
Secretary
Federal Energy Regulatory Commission
888 First St NE Room 1A
Washington, DC 20426

RE: Algonquin Gas Transmission, LLC Salem Lateral Pipeline, Salem, MA. **FERC No. PF14-5-000.**
MHC # RC.55170. CNAE-2014-114. EEA # 15231.

Dear Secretary Bose:

Staff of the Massachusetts Historical Commission (MHC), the Office of the Massachusetts State Historic Preservation Officer, have reviewed the following documents, received July 21 and 11, 2014, prepared and submitted by the Public Archaeology Laboratory (PAL) and HRA Gray & Pape, LLC, and the Massachusetts Environmental Policy Act (MEPA) Environmental Notification Form (ENF) received July 1, 2014, for the proposed project referenced above.

Draft project documents submitted by the PAL and reviewed by the MHC include:

- *Technical Report Addendum, Archaeological Overview (Reconnaissance) Survey, Algonquin Gas Transmission, LLC Salem Lateral Project-Terrestrial Portions, Salem, Massachusetts-June 2014;*

- *Historic Architectural Properties Assessment-Derby Waterfront Historic District dated July 7, 2014.*

- *HRA Gray & Pape Marine Archaeological Overview and Identification Survey Algonquin Salem Lateral Pipeline Project Offshore Massachusetts-July 2014.*

- *2014 FERC Application Filing, Volume II A, IIB, Resource Reports 1-12 and Appendix 1A, Oversized Mapping on a CD-ROM*

The MHC notes that the project pipeline route has been modified to incorporate extensive horizontal directional drilling, to avoid construction impacts within terrestrial portions of the project route outside existing industrial areas of Salem. The MHC agrees with the PAL technical report addendum management recommendations and recommends no further archaeological survey for the terrestrial portion of the project.

Results of the marine archaeological reconnaissance survey for the project did not identify historic maritime archaeological resources or intact landforms associated with ancient Native American land use and occupation within Beverly Harbor. Since no significant historic or archaeological resources were identified within the marine project area MHC concurs with the management recommendation provided in the HRA Gray & Pape technical report. No further survey is recommended for the marine portion of the project, as proposed.

Resource Reports 1 and 4 include the results of the traffic management plan for the Derby Waterfront Historic District (Resource Report 1, Appendix 1D) and the historic properties vibration study (Resource Report 4, Appendix 4D) noted in the PAL Historic Architectural Properties Assessment.

220 Morrissey Boulevard, Boston, Massachusetts 02125
(617) 727-8470 • Fax: (617) 727-5128
www.sec.state.ma.us/mhc

The MHC notes that the PAL has provided a preliminary opinion of no adverse effect to historic properties in Salem for the project based on the results of these identification efforts and studies. The MHC looks forward to FERC's findings and determinations (36 CFR 800.4 to 800.5) for the project.

These comments are offered to assist in compliance with Section 106 of the National Historic Preservation Act of 1966 as amended (36 CFR 800). Please contact Jonathan K. Patton at this office if you have any questions at this time.

Sincerely,

Brona Simon

Brona Simon
State Historic Preservation Officer
Executive Director
State Archaeologist
Massachusetts Historical Commission

xc: Sabrina K. Hepburn, Spectra Energy
Richard T. Paquette, TRC Environmental Corporation
Karen Kirk Adams, USACOE-New England District, Attn: Kevin R. Kotelly
Kate Atwood, USACOE-New England District
Michael Quijano-West, Salem Maritime National Historic Site
Bettina Washington, Wampanoag Tribe of Gay Head (Aquinnah)
Ramona Peters, Mashpee Wampanoag Tribe
Maeve Vallely Bartlett, EEA, Attn: Alex Strysky, MEPA Unit
DEP- NERO, Waterways
Victor Mastone, MBUAR
Bob Boeri, MA Office of Coastal Zone Management
Kathleen Winn, City of Salem, Dept. of Planning & Community Development
Salem Historical Commission
Historic Salem, Inc.
Deborah C. Cox, PAL, Attn: Gregory Dubell
Mike Tuttle, HRA Gray & Pape, LLC

The COMMONWEALTH OF MASSACHUSETTS
BOARD OF UNDERWATER ARCHAEOLOGICAL RESOURCES
EXECUTIVE OFFICE OF ENERGY AND ENVIRONMENTAL AFFAIRS
251 Causeway Street, Suite 800, Boston, MA 02114-2136
Tel. (617) 626-1200 Fax (617) 626-1240 Web Site: www.mass.gov/czm/buar/index.htm

11 September 2014

Mr. Kevin Kotelly, PE
U.S. Army Corps of Engineers
New England District
696 Virginia Road
Concord, MA 01742

RE: Salem Lateral Project, Algonquin Gas Transmission, LLC, Beverly and Salem
NAE 2014-114

Dear Mr. Kotelly,

The Massachusetts Board of Underwater Archaeological Resources has completed its review of the above referenced Public Notice, dated 2 September 2014. We offer the following comments.

This project area was subject of an intensive archaeological survey by HRA-Gray & Pape and The Public Archaeology Laboratory. The Board reviewed the report and concurred with the conclusions and recommendations that this project is unlikely to affect submerged cultural resources.

In addition, the Board had approved of the procedures regarding the discovery of unanticipated historic properties and human remains should they be encountered during the construction portion of the proposed project.

The Board appreciates the opportunity to provide these comments as part of the review process. Should you have any questions regarding this letter, please do not hesitate to contact me at the address above, by email at victor.mastone@state.ma.us, or by telephone at (617) 626-1141.

Sincerely,

Victor T. Mastone
Director and Chief Archaeologist

/vtm
Cc: Brona Simon, MHC
Cc via email attachment:
Bettina Washington, Wampanoag Tribe of Gay Head (Aquinnah)
Ramona Peters, Mashpee Wampanoag Tribe
Bob Boeri and Kathryn Glenn, MCZM
Sabrina K. Hepburn, Spectra Energy
Richard Paquette, TRC Environmental Corporation
Gregory R. Dubell, PAL
Suzanne G. Cherau, PAL
Michael Tuttle, HRA Gray & Pape

Printed on Recycled Paper