FINAL DRAFT
1994

Generic Scenario: Application of Semi-Aqueous Cleaners for Metal Cleaning and Degreasing

Metal cleaning is performed to remove contaminants such as dust, oils, waxes, metal fines, and other particulates from workpiece surfaces. Cleaning is performed in numerous industries for a variety of purposes. For example, in finishing processes such as metal plating and painting, a clean surface is desired to improve coating adherence. In maintenance activities, cleaning is performed to improve the effectiveness of the test procedure or repair operation. The exact purpose of a cleaning step and the degree of cleanliness required usually determine how an industry selects a cleaning process.

Semi-Aqueous Cleaners

The term *semi-aqueous* refers to the possible use of water in some part of the cleaning process, such as washing, rinsing, or both. As currently used, the term semi-aqueous refers to an emulsion or to a neat liquid that can be rinsed with water. Semi-aqueous cleaners are composed of natural or synthetic organic solvents, surfactants, corrosion inhibitors, and other additives. The commonly used semi-aqueous cleaners include water-miscible types and water-immiscible types. These are summarized in Table 1. The terpene, *d*-limonene, is perhaps the best known semi-aqueous compound.

Table 1. Semi-Aqueous Cleaners and Their Solubilities

Semi-Aqueous Compound	Example	Water Solubility
Terpene	*d*-Limonene Pinene	Emulsion[a] Emulsion[a]
Petroleum Hydrocarbon	C_{10}-C_{12} aliphatic hydrocarbons	Emulsion[a]
Ester	Aliphatic esters Dibasic acid esters Ethyl lactate	Emulsion[a] Emulsion[a] Soluble
Glycol Ether	Dipropylene glycol monomethyl ether Ethylene glycol monobutyl ether	Soluble Soluble
Pyrrolidone	N-methyl-2-pyrrolidone (NMP)	Soluble
Organic Amine	Ethanolamine	Soluble

[a] Surfactant is normally added to stabilize the water-in-solvent emulsion.

Figure 1 illustrates a typical semi-aqueous cleaning process. The part is first cleaned in the semi-aqueous cleaner. Cleaning often is augmented by spraying the parts with semi-aqueous cleaner. Bath agitation or ultrasonics also are used. Following an emulsion rinse step, air knives blow pressurized air over the parts to reduce dragout. This rinse is sent to a separator where the water is separated and returned to the rinse tank. As most semi-aqueous cleaners are reported to be biodegradable under favorable circumstances, the oil and cleaner are either recycled or disposed. Then, rinsing is performed using water, alcohol, or other organic solvent. Drying is the last step, in which heated, forced air often is used.

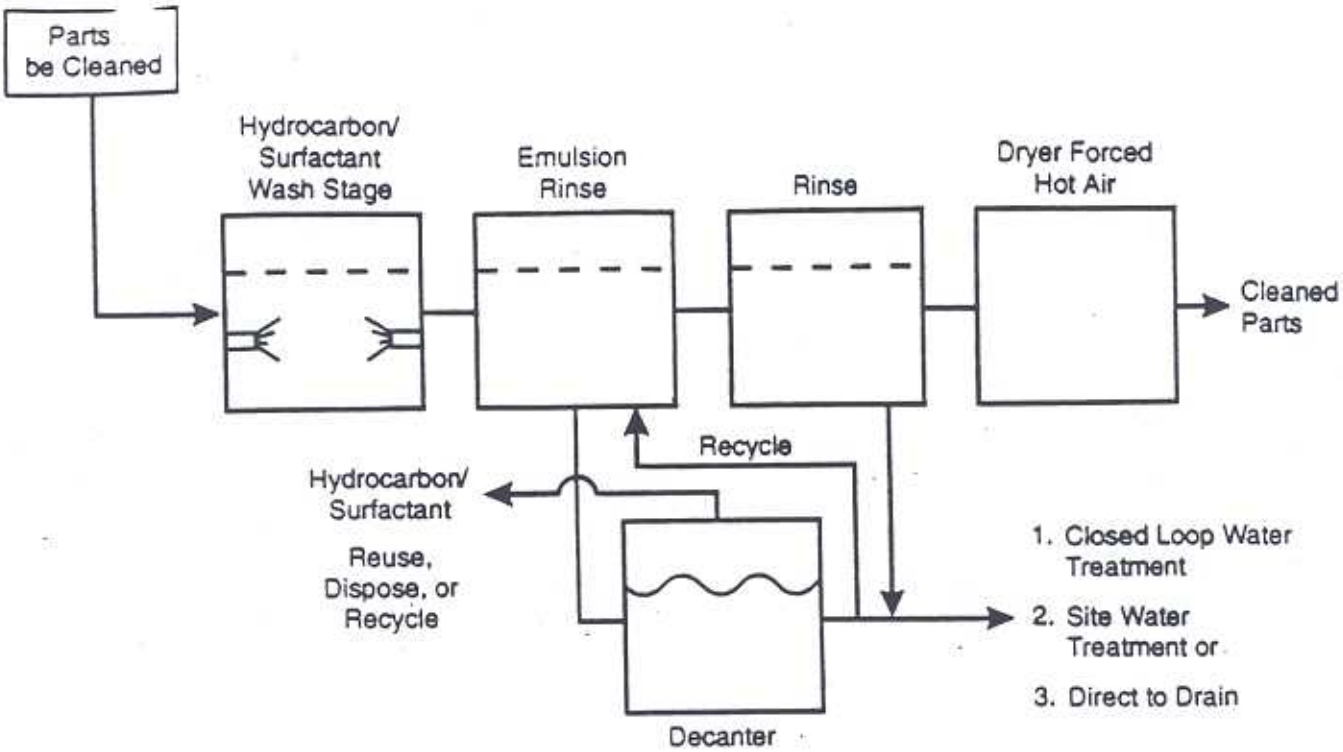

Figure 1. Semi-aqueous process for immiscible solvent (EPA, 1991, EPA/400/1-91/018, p. 41).

Waste Generation, Environmental Releases, and Exposure-Level Calculations

The PMN chemical may be used as a replacement for the organic solvents listed in Table 1 above. In this generic scenario, environmental emissions and worker exposure to this replacement PMN chemical were estimated based on the assumption that the PMN chemical would have physical and toxicological properties that are similar to those of *d*-limonene, the best known semi-aqueous cleaning solvent. The properties of *d*-limonene are listed in Table 2.

Table 2. Properties of *d*-Limonene

Mol. Wt.	Flash Point (°F)	Boiling Point (°F)	Vapor Pressure (mm Hg at 68°F)	Specific Gravity (at 68°F)	Viscosity (cps @ 77°F)	Exposure Limit
136.2	115	352	1.5	0.84	0.8	None[a]

[a] Neither NIOSH nor ACGIH reports TLV data for *d*-limonene.

The U.S. Environmental Protection Agency (EPA) estimates that there are approximately 100,000 small cold cleaners; 25,000 to 35,000 open-top vapor cleaners; and 2,500 to 4,000 in-line, conveyorized (cold and vapor) cleaners. Industries that perform vapor degreasing are expected to be most likely to select semi-aqueous cleaning as an alternative cleaning method. This is because users of solvent cleaners must eliminate ozone-depleting solvents under regulations established pursuant to the Clean Air Act Amendments and are encouraged to reduce emissions of hazardous solvents in cooperation with programs such as EPA's 33/50 Program. In this generic scenario, it is estimated that the PMN chemical will be used to replace currently used cleaning solvents in a maximum of ~20% of current open-top vapor and in-line, conveyorized cleaners, or approximately 7,800 facilities.

Typical semi-aqueous solvent cleaning equipment contains 10 to 200 gallons of semi-aqueous cleaner; an average cleaner size of 100 gallons has been assumed. It also can be assumed that up to 20% volume of additional PMN compound will be required during the time that a particular bath is used to make up for dragout losses. The lifetime of a cleaning bath is approximately 1 year, before disposal or recycling by vacuum distillation or other means is required.

Assumption:

%PMN = 100% by weight of the semi-aqueous cleaner

Environmental Releases

Air Emissions: Air emissions from cleaning equipment probably will be the most significant release to the environment of the PMN chemical. A study performed by Corpane Industries, Inc., a vendor of semi-aqueous cleaning equipment, indicated that 60% of the total air emissions are from the cleaning step and the emulsion rinse step (Sexton, 1992). To obtain a maximum estimate of the air emissions, the volume of make-up PMN chemical used can be assumed to be released to the air. Assuming that of a total of 39,000 cleaning facilities, 20% replace the currently used cleaning solvent with the PMN chemical, and that the average solvent volume in the cleaning tank is 100 gallons, the annual release of PMN chemical to the air can be estimated as:

39,000 (facilities) * 0.2 (fraction switching to PMN) * 100 gallons/facility
* 0.2 (percentage of PMN solvent replaced per year) = 156,000 gallons/year

This estimate probably is a large overestimate, because a 20% replacement rate is a maximum estimate and some of the losses of the PMN chemical may be to wastewater or solid wastestreams. The lower the volatility of the semi-aqueous PMN solvent, the lower the air emissions are likely to be as a fraction of the total environmental releases.

Liquid Emissions: The liquid wastestreams from the cleaning process include continuous streams from the emulsion rinse tanks and the water rinse tanks. These streams are recycled for reuse through a self-contained operating system, thereby minimizing the volume of the wastewater stream.

The cleaner solvent in the cleaning tank must be periodically replaced, resulting in a periodic wastestream of cleaner and soils. An annual replacement cycle appears most likely based on our survey. This waste solvent is drummed and incinerated by fuel-blending. The annual volume of PMN chemical that would be disposed through this route can be estimated as:

39,000 (facilities) * 0.2 (fraction switching to PMN) * 100 gallons/year/facility = 780,000 gallons/year

Solid Wastes: Solid wastes containing the PMN compound are expected to be minimal, being confined to in-line fluid filters and occasional cleaning of process equipment. Because the PMN compound will likely be a hydrocarbon, incineration is a probable means of disposal. Information on the volume of solid waste emissions from semi-aqueous cleaning facilities was not found.

Worker Exposure

The points at which a worker may come into contact with the PMN are typical of those for any cleaning solvent. The first point includes handling of the virgin material after it enters the shop in order to deliver it to the cleaning tanks. A limited degree of dermal exposure is expected from handling drums and parts, although contact with the PMN compound can be minimized by use of proper gloves. Once the cleaner is in the tanks the worker may come into contact with vapors from the tank. These will be highest when an open, unventilated system is used and if turbulent agitation is used. In an unautomated system, the parts must be manually transferred to each tank in sequence, permitting a greater opportunity for exposure to both the liquid cleaner and its vapor or mist. If the parts are allowed to air dry, vapors may continue to be released for a period after cleaning is completed. If an oven is used, the vapors typically are vented mechanically.

The frequency that a worker adds/removes large quantities of PMN compound from the cleaning system is once per month. The frequency that a worker handles parts which may have a residue of PMN compound is 10–20 times per day.

In a typical cleaning facility, approximately 5 persons are directly involved with cleaning equipment operations, and hence may be directly exposed to the PMN compound. Based on this estimate, the total number of workers who may come into contact with the PMN chemical in semi-aqueous cleaning facilities can be calculated as:

39,000 (facilities) * 0.2 (fraction switching to PMN) * 5 (workers/facility) = 39,000 workers

The extent of worker exposure to the PMN chemical in semi-aqueous cleaning depends on the nature of the process equipment and the work environment. Accurate quantification of the various routes for potential worker exposure is difficult with the limited information currently available. A search of National Technical Information Service (NTIS) literature was conducted to identify worker exposures to solvents currently used in semi-aqueous cleaners. A series of Health Hazard Assessment (HHA) reports issued by NIOSH (Cincinnati, OH) were identified; the reports discuss worker exposure monitoring studies conducted by NIOSH at various commercial facilities that used vapor degreasing. References to several of these reports are presented in the references section of this document.

Inhalation (mg/day): Inhalation of the PMN solvent is expected to the primary route of worker exposure to the PMN chemical. The most recent worker exposure monitoring conducted by NIOSH at various commercial vapor degreasing operations found personal breathing zone concentrations of:

- 8 ppm time-weighted average (TWA) concentration for 1,1,1-trichloroethane (TCA) detected for a cleaning operator at the Kreisler Industrial Corporation, Elmwood Park, NJ (NIOSH, 1992)
- 5.2 and 4.5 ppm TWA concentration for trichloroethlyene (TCE) at A.W. Cash Valve Manufacturing Corp., Decatur, IL (NIOSH, 1991)
- 14.7 to 33.4 ppm TWA concentration for TCE at Jostens Inc., Princeton, IL (NIOSH, 1989)
- 32 to 38 ppm TWA concentration for TCE at York International Corp., Madisonville, KY (NIOSH, 1989)

All of these studies have been conducted in cleaning facilities using volatile solvents. Air concentrations in the workplace for semi-aqueous solvents likely will be much lower than those for volatile solvents. However, the measured concentration ranges of volatile solvents could potentially be used as indicative of the range of expected PMN vapor concentrations to which workers will be exposed. The worst-case TWA concentrations of TCE appear to be 35 ppm, and could be applied to calculate the extent of worker exposure at a semi-aqueous cleaning facility.

Assuming that the work involved in vapor degreasing is medium-duty work in terms of the level of physical activity required, an average inhalation rate of 1.25 m^3/hr can be assumed (CEB, 1991). Inhalation exposure of a worker during an operating day to PMN chemical in the semi-aqueous cleaner may then be estimated as:

$$35 \text{ ppm} * P_{PMN}/P_{TCE} * MW_{PMN}/24.45 * 1.25 \ (m^3/hr) * 8 = ?? \ (mg/day)$$

where P_{PMN} and P_{TCE} are the vapor pressures at PMN chemical and TCE, respectively, and where MW is the molecular weight of the PMN. The vapor pressure of limonene at 68°F is 1.5 mm Hg, and TCE has a vapor pressure of 20 mm Hg at 25°C. It is assumed that both the PMN chemical and TCE are used as pure solvents, i.e., the mole fractions of each chemical are unity. The above calculation is based on an approach described in CEB (1991), and would provide a very rough estimate of the extent of worker exposure through inhalation to a PMN solvent. The true worker exposure would depend on the operating conditions and procedures at the facility and the mechanical design and controls used in the vapor degreaser. The representativeness of the conditions at the degreasing facility where the HHA was conducted by NIOSH to those existing at semi-aqueous cleaning facilities also must be considered.

Dermal Exposure (mg/day): Dermal exposure is expected to be minimal if proper gloves and other bodily protection gear are used. Our survey indicates that workers wear protective gear when contact with the bulk compound is likely, such as when adding drum-size quantities of semi-aqueous compound to the cleaning system. In the worst-case scenario, dermal exposure of 1,300 to 3,900 mg can be estimated from such activities using the typical factors in CEB (1991) for routine contact with two hands. Such activities are likely to occur at a cleaning facility at a frequency of once per month, when replacement PMN solvent is added to the cleaning tank or when the tank is emptied and refilled once a year.

Protective gear usually is not used at cleaning facilities if only casual contact is expected, such as when handling parts that have been cleaned and rinsed, but which may have a residue of the semi-aqueous compound. Dermal exposure arising from unprotected contact with PMN chemical residues on cleaned parts is difficult to estimate, but is expected to be minimal.

References

CEB, 1991. Chemical Engineering Branch. *CEB Manual for the Preparation of Engineering Assessments*, Volume 1, Contract No. 68-D8-0112, U.S. Environmental Protection Agency, Office of Toxic Substances, Washington, D.C., February 1991.

NIOSH, 1989. National Inst. for Occupational Safety and Health. Health Hazard Evaluation Report HETA 86-380-1957, York International Corporation, Madisonville, Kentucky. Crandall, M. S.; Albrecht, W. N.; Blade, L. M., 21 pp., 1989.

NIOSH, 1990. National Inst. for Occupational Safety and Health. Health Hazard Evaluation Report HETA 88-082-1971, Seitz, T.; Driscoll, R., 27 pp., 1989.

NIOSH, 1991. National Inst. for Occupational Safety and Health. Health Hazard Evaluation Report HETA 90-344-2159, A. W. Cash Valve Manufacturing Corporation, Decatur, Illinois, Barsan, M. E. 12 pp., 1991.

NIOSH, 1992. National Inst. for Occupational Safety and Health. Health Hazard Evaluation Report HETA 92-010-2234, Kreisler Industrial Corporation, Elmwood Park, New Jersey, Keifer, M., and Gelperin, K. 40 pp., 1992.

Sexton, C.A., 1992. *Semi-Aqueous Air and Water Emissions*, Corpane Industries, Inc., Feb. 18, 1992.

U.S. EPA. U.S. Environmental Protection Agency. *Eliminating CFC-113 And Methyl Chloroform In Precision Cleaning Operations*, EPA/400/1-91/018, p. 41.