FINAL DRAFT
1994

Generic Scenario: Printed Circuit Card Assembly (PCCA)
Manufacturing Process Using Conformal Coating

Background

Printed circuit card assembly is the last step in the overall printed circuit manufacturing process. After assembly the printed circuit card, with all its components installed and protective conformal coat applied, becomes a part of the total electronics package. Printed circuit card assembly is, with few exceptions, performed by the Original Equipment Manufacturer (OEM). Therefore, determining the number of companies involved in the assembly process is an intractable task, as is the determination of the total quantities involved. One manufacturer may be turning out tens of thousands a day versus another that may make fewer than a hundred a year.

One thing is common, however, and that is the steps in the PCCA manufacturing process. These steps are shown in Figure 1. The primary difference between the large and small manufacturer is the degree of automation used in each step, because each step can be performed manually and can result in a high quality end product.

Production Process

In all of the steps required and as presented in Figure 1, the steps associated with the application and cure of the conformal coat to the printed circuit card assembly (steps 14 and 15 respectively) are the most significant with regard to environmental releases and worker exposure to the PMN chemicals used as solvents for the conformal coat resins.

In step (14), there are five general types of conformal coat for printed circuit boards currently used in the United States. Four of these are systems of synthetic resins, usually dissolved in balanced volatile solvent vehicles. The resins are acrylic, polyurethane, epoxy, and silicone. The fifth material is a polymer, paraxylylene, and it is deposited from a vapor phase onto the circuit board while contained in a vacuum, so there is no release of the materials to the atmosphere [1]. This material is expensive and has limited special applications, so it is also the least used of the five by a significant ratio. The resins are mixed on a weight ratio of solvent-to-resin at anywhere from 10 to 50% of the total weight. The volatiles usually are xylene and toluene. The ratios depend on the method of application, which can be by spraying, dipping, or brushing on. Spraying is the least efficient in the use of the volatile materials but is the easiest to automate. Brush application is used only where small numbers of boards are produced. In all three of those processes, dermal exposure is possible depending on the process procedures and the precautions taken.

In the case of the resin-based materials, the volatiles must be driven off leaving only the basic resin (step 15). The thickness for the residual epoxies, acrylic, and polyurethane resins is 0.002 ± 0.001 inch and for the silicon resin the thickness will be 0.005 ± 0.003 inch. The curing to drive off the volatiles is done by ovens, by infrared convection, or at room temperature. Environmental protection requirements are driving the curing process to be a closed process where the volatiles are recondensed into the liquid form for easier processing. Regardless of the curing process, all of the volatiles are driven off leaving the original resin.

Waste Generation, Environmental Releases, and Exposure-Level Calculations

Waste Generation

To calculate the emissions of volatiles in the PCCA process, the following conditions are assumed.

- A total of 30 million m^3 of laminate is sold in the United States [2]
- The average number of layers of laminate per board is four.

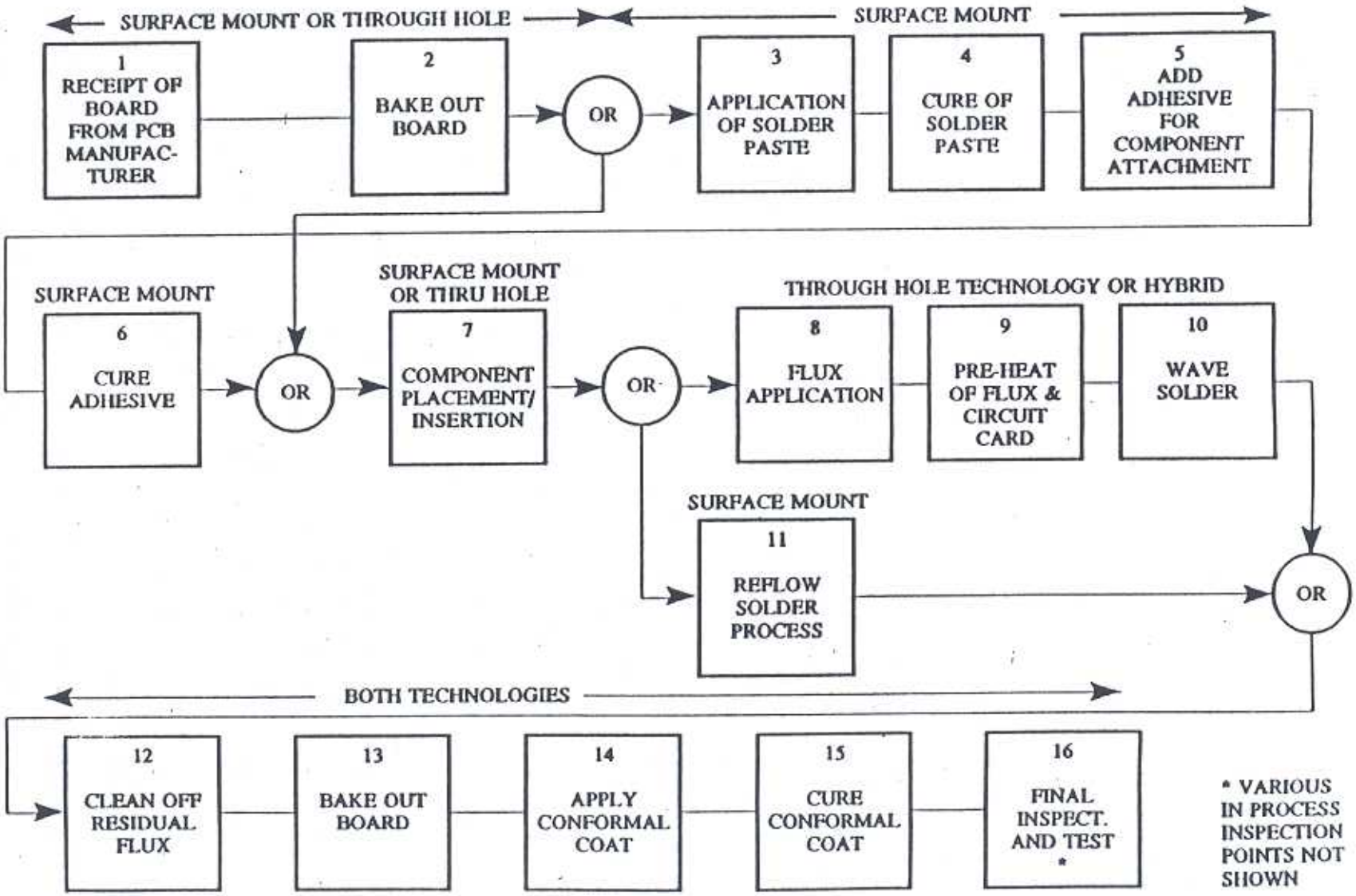

Figure 1. Printed Circuit Card Assembly Manufacturing Processes

- Only one-half of the layers receive conformal coat (the outside layers).
- The number of boards being conformal coated is 50% of the total manufactured.
- The laminate layer is 0.005 cm thick.

Thus, the volume of conformal coating material used in the United States per year is in the range of 1,000 to 2,000 m^3. The specific gravity of the resins used is approximately 1.0, so the weight of the resins used is approximately 1,500 $m^3 \times 1{,}000\ kg/m^3$, or approximately 1.5 million kg. At an average mixing ratio by weight of 4:1, approximately 400,000 kg of volatiles would be released to the environment per year in the United States.

A PMN chemical may be used as a solvent or resin in the conformal coating used in the PCCA manufacturing process. PMN chemicals also could be introduced in other parts of the process, such as soldering and cleaning. However, conformal coating is the most likely point of introduction of the PMN chemical, because conformal coatings typically contain the most significant hazardous chemicals, such as toluene and xylene, as solvents. In this generic scenario, air emissions and worker exposure for the PMN in conformal coatings have been estimated mainly through analogy to corresponding estimates for other currently used solvents.

Assumption

Considering the emissions on a factory-by-factory basis, it is assumed that a large factory would turn out approximately 100 boards per day. Estimating the boards to be 10 cm by 20 cm, the conformal coat area would be 0.04 m^3 per board, and therefore 4 m^3 per day would be used. At a thickness of 0.005 cm, this would be 0.02 m^3 or 20 kg per day with approximately 5 kg of solvent released to the environment per day. On a single-shift basis and 5 days per week, this would be 800 kg per year. Factories of this size would be located in large metropolitan areas, particularly in coastal Southern California and the coastal Northeast. In a city such as Columbus, Ohio, with a metropolitan population of approximately 1 million, there would be approximately five large factories and more than 150 businesses performing various degrees of conformal coating.

In the large factories, as many as four workers would be associated with various levels of exposure to the solvents, compared to one in the smaller businesses that do conformal coating.

It is assumed in this scenario that there are a maximum of 250,000 conformal coating booths or facilities nationwide, and that 2 million kg/year of conformal coating is currently used. The weight percent content of resin in the conformal coating ranges from 70 to 90% of the total weight; it is assumed that the weight percent of resin in the coating is 80%, and that the remainder (20%) is made up of the solvent.

%PMN : weight percent of PMN chemical used as solvent or resin in the coating
maximum would be 20% for PMN solvent and 80% for PMN resin

Environmental Releases (total kg/year)

<u>Solid Wastes:</u> Solid wastes containing the PMN chemical are expected to arise if the PMN chemical is used as a resin in the conformal coating. Solid waste arises from the coating process when dried resin is scraped off the assembly line surfaces. This waste is disposed of in a hazardous waste landfill or may be incinerated. The worst-case estimate of solid waste emissions of a PMN chemical used as a resin in the conformal coating is:

?? (kg/year usage of coating) * %PMN (fraction of resin content in coating) * F
= kg/year nationwide

where %PMN may be 80% if the PMN chemical is the only resin in the coating, and F is the fraction of coating that is not deposited on printed circuit cards. F would depend on the method of application; for a sprayed-on coating, F is likely to be in the 25 to 50% range.

If the PMN chemical is used as a solvent in the conformal coating, there would be negligible emissions of the chemical as solid waste. This is because the volatile solvent is designed to evaporate from the coating as part of the process.

Air Emissions: Air emissions will be the most significant route of environmental release for a PMN chemical used as a solvent in the conformal coating. Since the solvent is removed from the coating by heat or by other drying mechanisms at the last stage in the conformal coating process, it is reasonable to assume that the solvent will be completely released to the air. Some of the larger conformal coating facilities, and most new facilities, have air pollution control equipment for removal of solvents from the air stream in the drying process. However, the majority of conformal coating booths do not currently employ air emission controls. The worst-case estimate of air emissions of a PMN chemical used as a solvent in the conformal coating is:

?? (kg/year usage of coating) * %PMN (fraction of solvent content in coating)
= kg/year nationwide

where %PMN may be as much as 20% if the PMN chemical is the only solvent in the coating. Even at facilities that employ air emissions control equipment, the common approach involves recondensing of the volatiles into liquid form for processing as liquid waste, most likely though incineration using fuel-blending.

When the PMN chemical is used as a resin in the conformal coating, there are negligible air emissions of the chemical. This is because the resin is designed to have a low volatility and would not evaporate from the coating. When the PMN chemical is used as a solvent in the conformal coating, there are negligible emissions of the chemical as solid waste. This is because the volatile solvent is designed to evaporate from the coating as part of the process.

Liquid Emissions: Liquid waste emissions from the conformal coating process that contain the PMN chemical are expected to be minimal. At facilities that have pollution control equipment installed, solvents volatilized from the coating in the drying step would be recovered and disposed of as liquid waste.

Worker Exposure

Worker exposure to the PMN chemical is expected to be primarily through the inhalation and dermal routes. If the PMN chemical is used as a solvent, workers will be exposed to PMN vapors during coating application as well during the drying step. Inhalation exposure also could occur from operations such as solvent transfer. Inhalation exposure to a PMN chemical used as a resin is likely to be minimal because of the low volatility of resin compounds. Dermal exposure to both resin and solvent PMN chemical is anticipated from the application step, especially for brush or dip applications of the conformal coating. Dermal exposure also could arise from handling the printed circuit cards after application of the conformal coating.

The extent of worker exposure to the PMN chemical in these process steps would be dependent on the nature of the operations used in individual facilities. Accurate quantification of the various routes for potential worker exposure is difficult with the limited information currently available for the generic PMN chemical. A search of NTIS literature was conducted to identify worker exposures to solvents currently used in conformal coating applications. No Health Hazard Evaluation (HHE) reports from the National Institute of Occupational Safety and Health (NIOSH) (Cincinnati, OH) were identified that related to workplace air concentrations or to worker exposure from conformal coatings applications.

Inhalation (mg/day): In the absence of measured air concentrations in facilities applying conformal coating, it is very difficult to estimate inhalation exposure to a PMN chemical used as a solvent in the conformal coating. The most practical means of estimating worker exposure from the inhalation route would be to use personal monitoring data from worker exposure studies conducted of conformal coating operations in a printed circuit card manufacturing facility.

Assuming that the work involved in vapor degreasing is medium-duty work in terms of the level of physical activity required, an average inhalation rate of 1.25 m^3/hr can be assumed [3].

Inhalation exposure of a worker during an operating day to PMN chemical used as a solvent in the conformal coating is:

$$C_{Sol}(ppm) * (X_{PMN}P_{PMN}/X_{tPA}P_{tPA}) * MW_{PMN}/24.25 * 1.25\ (m^3/hr) * 8\ (hrs/day) = \quad ??\ (mg/day)$$

where C_{Sol} is the measured time-weighted average (TWA) concentration of a solvent currently used in the conformal coating (in ppm), found through measurements of breathing zone air at a conformal coating facility; X_{PMN} and X_{Sol} are the mole fractions of the PMN chemical and the current solvent in the conformal coating, respectively; and P_{PMN} and P_{Sol} are the vapor pressures at room temperature of the PMN chemical and current solvent, respectively.

Note that the above calculation would only provide a rough estimate of the extent of worker exposure to a PMN chemical through the inhalation route. CEB provides a list of assumptions inherent in the above estimation process and the limitations of the approach [3]. The true worker exposure would depend on the particular operating conditions and procedures used at the facility and their similarity to the corresponding characteristics of the coating facility studied.

Dermal Exposure (mg/day): Dermal exposure can arise directly from application of coatings in the case of brush or dip coating processes. In addition, dermal exposure could also arise from handling the printed circuit boards, although this may be negligible after the drying or curing process. Because contamination of the circuit cards is of significant concern, latex gloves may be used for most of these operations.

We expect that dermal exposure to the PMN chemical will be in the *incidental contact* exposure category [3].

Using the exposure factors provided in CEB [3], the dermal exposure of workers to the PMN chemical in the conformal coating will be:

[(1,300 to 3,900) mg * 1 contact/day] * %PMN/100 mg/day

In the above estimate, we have assumed one contact per day with a coated surface (incidental contact, 2 hands).

References

[1] John Waryold, "How To Use Conformal Coatings Efficiently," *Printed Circuit Handbook*, 2nd ed., McGraw Hill, New York, 1986.

[2] "U.S. PCB Industry Demographics," *Printed Circuit Fabrication Magazine* 16 (5): 48-53, May 1993.

[3] CEB, 1991. Chemical Engineering Branch. *CEB Manual for the Preparation of Engineering Assessments*, Volume 1, Contract No. 68-D8-0112, U.S. Environmental Protection Agency, Office of Toxic Substances, Washington, D.C., February 1991.